Matthew G. Bevin
Governor

COMMONWEALTH OF KENTUCKY
TRANSPORTATION CABINET
Frankfort, Kentucky 40622
www.transportation.ky.gov/

Greg Thomas
Secretary

April 16, 2019

CALL NO. 200
CONTRACT ID NO. 195080
ADDENDUM # 1

Subject: HOPKINS-CHRISTIAN COUNTIES, 121GR19D080 - STP BRZ
Letting April 26, 2019

(1) Revised – Material Summary – Pages 129-131 of 176
(2) Revised – Proposal Bid Items – Pages 175-176 of 176
(3) Revised – Plan Sheets – R1 054B00088N, R2 054B00088N, R3 054B00088N, S2 054B00088N, S5 054B00088N R1 084B00182N, R2 084B00182N, R3 084B00182N, S2 084B00182N, S6 084B00182N,

Proposal revisions are available at http://transportation.ky.gov/Construction-Procurement/.

If you have any questions, please contact us at 502-564-3500.

Sincerely,

Rachel Mills

Rachel Mills, P.E.
Director
Division of Construction Procurement

RM:mr
Enclosures

Kentucky UNBRIDLED SPIRIT
An Equal Opportunity Employer M/F/D

MATERIAL SUMMARY

CONTRACT ID: 195080 **121GR19D080 - STP BRZ** **BR02400411901**

US 41 ADDRESS DEFICIENCIES OF US-41 OVER NORTH FORK LITTLE RIVER (024B00005N), FROM MP 15.33 TO MP 15.347. BRIDGE SUPERSTRUCTURE REHAB, A DISTANCE OF .01 MILES.

Project Line No	Bid Code	DESCRIPTION	Quantity	Unit
0280	02223	GRANULAR EMBANKMENT	28.00	CUYD
0285	02355	GUARDRAIL-STEEL W BEAM-S FACE A	100.00	LF
0290	02399	EXTRA LENGTH GUARDRAIL POST	32.00	EACH
0295	02650	MAINTAIN & CONTROL TRAFFIC	1.00	LS
0300	02671	PORTABLE CHANGEABLE MESSAGE SIGN	2.00	EACH
0305	03299	ARMORED EDGE FOR CONCRETE	85.00	LF
0310	03304	BRIDGE OVERLAY APPROACH PAVEMENT	240.00	SQYD
0315	08019	CYCLOPEAN STONE RIP RAP	21.00	TON
0320	08104	CONCRETE-CLASS AA	127.50	CUYD
0325	08150	STEEL REINFORCEMENT	100.00	LB
0330	08151	STEEL REINFORCEMENT-EPOXY COATED	38,150.00	LB
0335	08301	REMOVE SUPERSTRUCTURE	1.00	LS
0340	08801	GUARDRAIL-STEEL W BEAM-S FACE BR	148.00	LF
0345	08003	FOUNDATION PREPARATION	1.00	LS
0350	21415ND	EROSION CONTROL	1.00	LS
0355	22146EN	CONCRETE PATCHING REPAIR	40.00	SQFT
0360	23744EC	EPOXY INJECTION CRACK REPAIR	200.00	LF
0365	24982EC	CONCRETE COATING - Approx. 4425 SF	1.00	LS
0370	02569	DEMOBILIZATION	1.00	LS
0375	02568	MOBILIZATION	1.00	LS

MATERIAL SUMMARY

CONTRACT ID: 195080 **121GR19D080 - STP BRZ** **BR05400701901**

KY 70 - BEULAH ROAD ADDRESS DEFICIENCIES OF KY-70 BRIDGE OVER SUGAR CREEK (054B00088N), FROM MP 13.460 TO MP 13.474. BRIDGE REPLACEMENT, A DISTANCE OF .01 MILES.

Project Line No	Bid Code	DESCRIPTION	Quantity	Unit
0005	01987	DELINEATOR FOR GUARDRAIL BI DIRECTIONAL WHITE	6.00	EACH
0010	02223	GRANULAR EMBANKMENT	28.00	CUYD
0015	02351	GUARDRAIL-STEEL W BEAM-S FACE - (REVISED: 4-16-19)	137.50	LF
0020	02360	GUARDRAIL TERMINAL SECTION NO 1	1.00	EACH
0025	02367	GUARDRAIL END TREATMENT TYPE 1	1.00	EACH
0030	02381	REMOVE GUARDRAIL	82.00	LF
0035	02399	EXTRA LENGTH GUARDRAIL POST	45.00	EACH
0040	02545	CLEARING AND GRUBBING - Less than 1 acre	1.00	LS
0045	02650	MAINTAIN & CONTROL TRAFFIC	1.00	LS
0050	02671	PORTABLE CHANGEABLE MESSAGE SIGN	4.00	EACH
0055	02726	STAKING	1.00	LS
0060	02731	REMOVE STRUCTURE	1.00	LS
0065	03299	ARMORED EDGE FOR CONCRETE	65.00	LF
0070	03304	BRIDGE OVERLAY APPROACH PAVEMENT	199.00	SQYD
0075	08003	FOUNDATION PREPARATION	1.00	LS
0080	08019	CYCLOPEAN STONE RIP RAP	125.00	TON
0085	08033	TEST PILES	102.00	LF
0090	08046	PILES-STEEL HP12X53	552.00	LF
0095	08094	PILE POINTS-12 IN	14.00	EACH
0100	08100	CONCRETE-CLASS A	35.00	CUYD
0105	08104	CONCRETE-CLASS AA	48.50	CUYD
0110	08151	STEEL REINFORCEMENT-EPOXY COATED	9,800.00	LB
0115	08665	PRECAST PC BOX BEAM CB33-48	588.00	LF
0120	21415ND	EROSION CONTROL	1.00	LS
0125	24982EC	CONCRETE COATING - Approx. 1630 SF	1.00	LS
0130	02569	DEMOBILIZATION	1.00	LS
0135	02568	MOBILIZATION	1.00	LS
0140	00443	ENTRANCE PIPE-24 IN - (ADDED: 4-16-19)	36.00	LF
0145	25017ED	RAIL SYSTEM SIDE MOUNTED MGS - (ADDED: 4-16-19)	168.00	LF

MATERIAL SUMMARY

CONTRACT ID: 195080 **121GR19D080 - STP BRZ** **BR05400701902**

KY 70 - BEULAH ROAD ADDRESS DEFICIENCIES OF KY-70 BRIDGE OVER CLEAR CREEK (054B00182N), FROM MP 14.248 TO MP 14.272. BRIDGE REPLACEMENT, A DISTANCE OF .02 MILES.

Project Line No	Bid Code	DESCRIPTION	Quantity	Unit
0150	01987	DELINEATOR FOR GUARDRAIL BI DIRECTIONAL WHITE	8.00	EACH
0155	02223	GRANULAR EMBANKMENT	28.00	CUYD
0160	02367	GUARDRAIL END TREATMENT TYPE 1	4.00	EACH
0165	02399	EXTRA LENGTH GUARDRAIL POST	68.00	EACH
0170	02545	CLEARING AND GRUBBING - Less than 1 acre	1.00	LS
0175	02650	MAINTAIN & CONTROL TRAFFIC	1.00	LS
0180	02671	PORTABLE CHANGEABLE MESSAGE SIGN	4.00	EACH
0185	02726	STAKING	1.00	LS
0190	02731	REMOVE STRUCTURE	1.00	LS
0195	03299	ARMORED EDGE FOR CONCRETE	56.00	LF
0200	03304	BRIDGE OVERLAY APPROACH PAVEMENT	214.00	SQYD
0205	08003	FOUNDATION PREPARATION	1.00	LS
0210	08019	CYCLOPEAN STONE RIP RAP	90.00	TON
0215	08033	TEST PILES	220.00	LF
0220	08046	PILES-STEEL HP12X53	900.00	LF
0225	08094	PILE POINTS-12 IN	22.00	EACH
0230	08100	CONCRETE-CLASS A	116.50	CUYD
0235	08104	CONCRETE-CLASS AA	63.50	CUYD
0240	08151	STEEL REINFORCEMENT-EPOXY COATED	17,500.00	LB
0245	08662	PRECAST PC BOX BEAM CB17-48	966.00	LF
0250	21415ND	EROSION CONTROL	1.00	LS
0255	24982EC	CONCRETE COATING - Approx. 2915 SF	1.00	LS
0260	02569	DEMOBILIZATION	1.00	LS
0265	02568	MOBILIZATION	1.00	LS
0270	02351	GUARDRAIL-STEEL W BEAM-S FACE - (ADDED: 4-16-19)	100.00	LF
0275	25017ED	RAIL SYSTEM SIDE MOUNTED MGS - (ADDED: 4-16-19)	277.00	LF

195080

PROPOSAL BID ITEMS

Report Date 4/16/19

Section: 0001 - BRIDGE - 024B00005N

LINE	BID CODE	ALT	DESCRIPTION	QUANTITY	UNIT	UNIT PRIC	FP	AMOUNT
0010	02223		GRANULAR EMBANKMENT	28.00	CUYD		$	
0020	02355		GUARDRAIL-STEEL W BEAM-S FACE A	100.00	LF		$	
0030	02399		EXTRA LENGTH GUARDRAIL POST	32.00	EACH		$	
0040	02650		MAINTAIN & CONTROL TRAFFIC	1.00	LS		$	
0050	02671		PORTABLE CHANGEABLE MESSAGE SIGN	2.00	EACH		$	
0060	03299		ARMORED EDGE FOR CONCRETE	85.00	LF		$	
0070	03304		BRIDGE OVERLAY APPROACH PAVEMENT	240.00	SQYD		$	
0080	08003		FOUNDATION PREPARATION	1.00	LS		$	
0090	08019		CYCLOPEAN STONE RIP RAP	21.00	TON		$	
0100	08104		CONCRETE-CLASS AA	127.50	CUYD		$	
0110	08150		STEEL REINFORCEMENT	100.00	LB		$	
0120	08151		STEEL REINFORCEMENT-EPOXY COATED	38,150.00	LB		$	
0130	08301		REMOVE SUPERSTRUCTURE	1.00	LS		$	
0140	08801		GUARDRAIL-STEEL W BEAM-S FACE BR	148.00	LF		$	
0150	21415ND		EROSION CONTROL	1.00	LS		$	
0160	22146EN		CONCRETE PATCHING REPAIR	40.00	SQFT		$	
0170	23744EC		EPOXY INJECTION CRACK REPAIR	200.00	LF		$	
0180	24982EC		CONCRETE COATING Approx. 4425 SF	1.00	LS		$	

Section: 0002 - BRIDGE - 054B00088N

LINE	BID CODE	ALT	DESCRIPTION	QUANTITY	UNIT	UNIT PRIC	FP	AMOUNT
0185	00443		ENTRANCE PIPE-24 IN (ADDED: 4-16-19)	36.00	LF		$	
0190	01987		DELINEATOR FOR GUARDRAIL BI DIRECTIONAL WHITE	6.00	EACH		$	
0200	02223		GRANULAR EMBANKMENT	28.00	CUYD		$	
0210	02351		GUARDRAIL-STEEL W BEAM-S FACE (REVISED: 4-16-19)	137.50	LF		$	
0230	02360		GUARDRAIL TERMINAL SECTION NO 1	1.00	EACH		$	
0240	02367		GUARDRAIL END TREATMENT TYPE 1	1.00	EACH		$	
0250	02381		REMOVE GUARDRAIL	82.00	LF		$	
0260	02399		EXTRA LENGTH GUARDRAIL POST	45.00	EACH		$	
0270	02545		CLEARING AND GRUBBING Less than 1 acre	1.00	LS		$	
0280	02650		MAINTAIN & CONTROL TRAFFIC	1.00	LS		$	
0290	02671		PORTABLE CHANGEABLE MESSAGE SIGN	4.00	EACH		$	
0300	02726		STAKING	1.00	LS		$	
0310	02731		REMOVE STRUCTURE	1.00	LS		$	
0320	03299		ARMORED EDGE FOR CONCRETE	65.00	LF		$	
0330	03304		BRIDGE OVERLAY APPROACH PAVEMENT	199.00	SQYD		$	
0340	08003		FOUNDATION PREPARATION	1.00	LS		$	
0350	08019		CYCLOPEAN STONE RIP RAP	125.00	TON		$	
0360	08033		TEST PILES	102.00	LF		$	
0370	08046		PILES-STEEL HP12X53	552.00	LF		$	
0380	08094		PILE POINTS-12 IN	14.00	EACH		$	

195080

PROPOSAL BID ITEMS

Report Date 4/16/19

LINE	BID CODE	ALT	DESCRIPTION	QUANTITY	UNIT	UNIT PRIC	FP	AMOUNT
0390	08100		CONCRETE-CLASS A	35.00	CUYD		$	
0400	08104		CONCRETE-CLASS AA	48.50	CUYD		$	
0410	08151		STEEL REINFORCEMENT-EPOXY COATED	9,800.00	LB		$	
0420	08665		PRECAST PC BOX BEAM CB33-48	588.00	LF		$	
0440	21415ND		EROSION CONTROL	1.00	LS		$	
0450	24982EC		CONCRETE COATING Approx. 1630 SF	1.00	LS		$	
0455	25017ED		RAIL SYSTEM SIDE MOUNTED MGS (ADDED: 4-16-19)	168.00	LF		$	

Section: 0003 - BRIDGE - 054B00182N

LINE	BID CODE	ALT	DESCRIPTION	QUANTITY	UNIT	UNIT PRIC	FP	AMOUNT
0460	01987		DELINEATOR FOR GUARDRAIL BI DIRECTIONAL WHITE	8.00	EACH		$	
0470	02223		GRANULAR EMBANKMENT	28.00	CUYD		$	
0475	02351		GUARDRAIL-STEEL W BEAM-S FACE (ADDED: 4-16-19)	100.00	LF		$	
0490	02367		GUARDRAIL END TREATMENT TYPE 1	4.00	EACH		$	
0500	02399		EXTRA LENGTH GUARDRAIL POST	68.00	EACH		$	
0510	02545		CLEARING AND GRUBBING Less than 1 acre	1.00	LS		$	
0520	02650		MAINTAIN & CONTROL TRAFFIC	1.00	LS		$	
0530	02671		PORTABLE CHANGEABLE MESSAGE SIGN	4.00	EACH		$	
0540	02726		STAKING	1.00	LS		$	
0550	02731		REMOVE STRUCTURE	1.00	LS		$	
0560	03299		ARMORED EDGE FOR CONCRETE	56.00	LF		$	
0570	03304		BRIDGE OVERLAY APPROACH PAVEMENT	214.00	SQYD		$	
0580	08003		FOUNDATION PREPARATION	1.00	LS		$	
0590	08019		CYCLOPEAN STONE RIP RAP	90.00	TON		$	
0600	08033		TEST PILES	220.00	LF		$	
0610	08046		PILES-STEEL HP12X53	900.00	LF		$	
0620	08094		PILE POINTS-12 IN	22.00	EACH		$	
0630	08100		CONCRETE-CLASS A	116.50	CUYD		$	
0640	08104		CONCRETE-CLASS AA	63.50	CUYD		$	
0650	08151		STEEL REINFORCEMENT-EPOXY COATED	17,500.00	LB		$	
0660	08662		PRECAST PC BOX BEAM CB17-48	966.00	LF		$	
0680	21415ND		EROSION CONTROL	1.00	LS		$	
0690	24982EC		CONCRETE COATING Approx. 2915 SF	1.00	LS		$	
0695	25017ED		RAIL SYSTEM SIDE MOUNTED MGS (ADDED: 4-16-19)	277.00	LF		$	

Section: 0004 - DEMOBILIZATION

LINE	BID CODE	ALT	DESCRIPTION	QUANTITY	UNIT	UNIT PRIC	FP	AMOUNT
0700	02568		MOBILIZATION	1.00	LS		$	
0710	02569		DEMOBILIZATION	1.00	LS		$	

COUNTY OF	ITEM NO.	SHEET NO.
HOPKINS	2-10005	R1

TRANSPORTATION CABINET
DEPARTMENT OF HIGHWAYS

HOPKINS COUNTY
KY 70 - BEULAH RD. OVER SUGAR CREEK
STA. STA. 310+93.75

STANDARD DRAWINGS

BBP-003-02	ELASTOMERIC BEARING PADS FOR BOX BEAMS
BDP-002-03	BOX BEAM BEARING DETAILS
BDP-003-03	BOX BEAM MISCELLANEOUS DETAILS
BDP-010-04	BOX BEAM B33 AND CB33 DETAILS
BGX-006-10	STENCILS FOR STRUCTURES
BJE-001-13	NEOPRENE EXPANSION DAM AND ARMORED EDGES
BPS-003-09	HP12X53 STEEL PILE
RBI-002-07	TYPICAL GUARDRAIL INSTALLATION
RBR-005-11	GUARDRAIL COMPONENTS
RBR-010-06	GUARDRAIL TERMINAL SECTIONS
RDI-001-10	CULVERT, ENTRANCE AND STORM SEWER PIPE
	TYPES AND COVER HEIGHTS
RDI-020-09	PIPE BEDDING FOR CULVERTS, ENTRANCE AND
	STORM SEWER PIPE
RDI-040-01	EROSION CONTROL BLANKET SLOPE INSTALLATION
RDX-210-03	TEMPORARY SILT FENCE
RDX-220-05	SILT TRAP A
RDX-225-01	SILT TRAP B
RDX-230-01	SILT TRAP C
RGX-001-06	MISCELLANEOUS STANDARDS
RGX-200-01	ONE POINT PROCTOR FAMILY OF CURVES

ACTIVE SEPIAS

SEPIA 009	TREATMENT OF EMBANKMENTS AT END-BENTS
SEPIA 010	TREATMENT OF EMBANKMENTS AT END-BENTS - DETAILS
SEPIA 024	TYPICAL GUARDRAIL INSTALLATIONS
SEPIA 027	STEEL BEAM GUARDRAIL ("W" BEAM)
SEPIA 028	STEEL GUARDRAIL POSTS
SEPIA 029	GUARDRAIL END TREATMENT TYPE 1
SEPIA 032	DELINEATORS FOR GUARDRAIL
SEPIA 033	GUARDRAIL SYSTEM TRANSITION
SEPIA 047	BOX BEAM GENERAL NOTES & REFERENCES
SEPIA 048	BOX BEAM TENSION ROD DETAILS

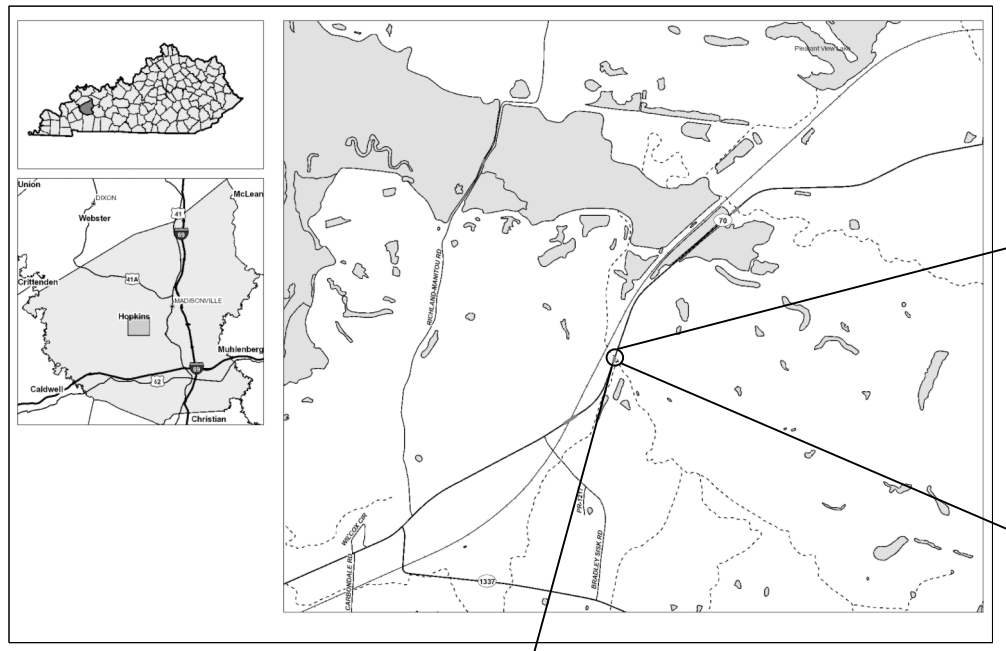

LOCATION MAP

INDEX OF SHEETS

Sheet No.	Description
R1	TITLE SHEET
R2	TYPICAL SHEET
R3	PLAN SHEET
R4	PROFILE SHEET
S1	GENERAL NOTES
S2	LAYOUT SHEET
S3	PILE RECORD
S4	END BENTS
S5	RAILING - SIDE MOUNTED MGS

SPECIAL NOTES

CONTRACT COMPLETION DATE AND LIQUIDATED DAMAGES
TRAFFIC CONTROL ON BRIDGE REPAIR CONTRACTS
PLACING BRIDGE OVERLAY APPROACH PAVEMENT
PORTABLE CHANGEABLE MESSAGE SIGNS
EROSION PREVENTION AND SEDIMENT CONTROL
STRUCTURES WITH OVER THE SIDE DRAINAGE
CONCRETE COATING

SPECIAL PROVISIONS

69 EMBANKMENT AT BRIDGE END BENT STRUCTURES

SPECIFICATIONS

2012 Standard Specifications for Road and Bridge Construction.

2017 AASHTO LRFD Bridge Design Specifications with Current Interims.

DESIGN CRITERIA

CLASS OF HIGHWAY: MAJOR COLLECTOR
TYPE OF TERRAIN:
DESIGN SPEED:
REQUIRED NPSD:
REQUIRED PSD:
LEVEL OF SERVICE:
ADT PRESENT (2016): 2,327
ADT FUTURE ( ):
DHV:
D %:
T %:

GEOGRAPHIC COORDINATES

LATITUDE 37 DEGREES 17 MINUTES 14 SECONDS NORTH
LONGITUDE 87 DEGREES 34 MINUTES 48 SECONDS WEST

DESIGNED

% RESTRICTED SD:
LEVEL OF SERVICE:
MAX. DISTANCE W/O PASSING:

BEFORE YOU DIG

The contractor is instructed to call 1-800-752-6007 to reach KY 811, the one-call system for information on the location of existing underground utilities. The call is to be placed a minimum of two (2) and no more than ten (10) business days prior to excavation. The contractor should be aware that owners of underground facilities are not required to be members of the KY 811 one-call Before-U-Dig (BUD) service. The contractor must coordinate excavation with the utility owners, including those whom do not subscribe to KY 811. It may be necessary for the contractor to contact the County Court Clerk to determine what utility companies have facilities in the area.

Existing Bridge ID # 054B00088N

REV. NO.	SHEETS REVISED	DATE
1	R1, R2, R3, S2 & ADDED S5	4/08/19

TABLE OF REVISIONS

PREPARED BY Stantec

BRIDGING KENTUCKY — Restore | Renew | Replace

STATE OF KENTUCKY — CHRISTOPHER D. PADGETT 27991 — LICENSED PROFESSIONAL ENGINEER

STATE OF KENTUCKY — ROBERT V. CATRON 32481 — LICENSED PROFESSIONAL ENGINEER

REVISION	DATE

Commonwealth of Kentucky
DEPARTMENT OF HIGHWAYS
COUNTY OF
HOPKINS

ITEM NO. 2-10005
DRAWING NO. 27937
PROJECT NUMBER:
LETTING DATE: APRIL 26, 2019

RECOMMENDED BY: PROJECT MANAGER DATE:

PLAN APPROVED BY: STATE HIGHWAY ENGINEER DATE:

FILE NAME: $DGNSPEC$
USER: $USER$ DATE PLOTTED: $DATE$ $TIME$
E-SHEET NAME:
MicroStation v8.11.9.459

COUNTY OF	ITEM NO.	SHEET NO.
HOPKINS	2-10005	R1

TRANSPORTATION CABINET
DEPARTMENT OF HIGHWAYS

HOPKINS COUNTY
KY 70 - BEULAH RD. OVER SUGAR CREEK
STA. STA. 310+93.75

STANDARD DRAWINGS

BBP-003-02	ELASTOMERIC BEARING PADS FOR BOX BEAMS
BDP-002-03	BOX BEAM BEARING DETAILS
BDP-003-03	BOX BEAM MISCELLANEOUS DETAILS
BDP-010-04	BOX BEAM B33 AND CB33 DETAILS
BDX-006-10	STENCILS FOR STRUCTURES
BJE-001-13	NEOPRENE EXPANSION DAM AND ARMORED EDGES
BPS-003-09	HP12X53 STEEL PILE
RBI-002-07	TYPICAL GUARDRAIL INSTALLATION
RBR-005-11	GUARDRAIL COMPONENTS
RBR-010-06	GUARDRAIL TERMINAL SECTIONS
RDI-001-10	CULVERT, ENTRANCE AND STORM SEWER PIPE TYPES AND COVER HEIGHTS
RDI-020-09	PIPE BEDDING FOR CULVERTS, ENTRANCE AND STORM SEWER PIPE
RDI-040-01	EROSION CONTROL BLANKET SLOPE INSTALLATION
RDX-210-03	TEMPORARY SILT FENCE
RDX-220-05	SILT TRAP A
RDX-225-01	SILT TRAP B
RDX-230-01	SILT TRAP C
RGX-001-06	MISCELLANEOUS STANDARDS
RGX-200-01	ONE POINT PROCTOR FAMILY OF CURVES

ACTIVE SEPIAS

SEPIA 009	TREATMENT OF EMBANKMENTS AT END-BENTS
SEPIA 010	TREATMENT OF EMBANKMENTS AT END-BENTS - DETAILS
SEPIA 024	TYPICAL GUARDRAIL INSTALLATIONS
SEPIA 027	STEEL BEAM GUARDRAIL ("W" BEAM)
SEPIA 028	STEEL GUARDRAIL POSTS
SEPIA 029	GUARDRAIL END TREATMENT TYPE I
SEPIA 032	DELINEATORS FOR GUARDRAIL
SEPIA 033	GUARDRAIL SYSTEM TRANSITION
SEPIA 047	BOX BEAM GENERAL NOTES & REFERENCES
SEPIA 048	BOX BEAM TENSION ROD DETAILS

INDEX OF SHEETS

Sheet No.	Description
R1	TITLE SHEET
R2	TYPICAL SHEET
R3	PLAN SHEET
R4	PROFILE SHEET
S1	GENERAL NOTES
S2	LAYOUT SHEET
S3	PILE RECORD
S4	END BENTS
S5	RAILING - SIDE MOUNTED MGS

SPECIAL NOTES

CONTRACT COMPLETION DATE AND LIQUIDATED DAMAGES
TRAFFIC CONTROL ON BRIDGE REPAIR CONTRACTS
PLACING BRIDGE OVERLAY APPROACH PAVEMENT
PORTABLE CHANGEABLE MESSAGE SIGNS
EROSION PREVENTION AND SEDIMENT CONTROL
STRUCTURES WITH OVER THE SIDE DRAINAGE
CONCRETE COATING

SPECIAL PROVISIONS

69 EMBANKMENT AT BRIDGE END BENT STRUCTURES

SPECIFICATIONS

2012 Standard Specifications for Road and Bridge Construction.

2017 AASHTO LRFD Bridge Design Specifications with Current Interims.

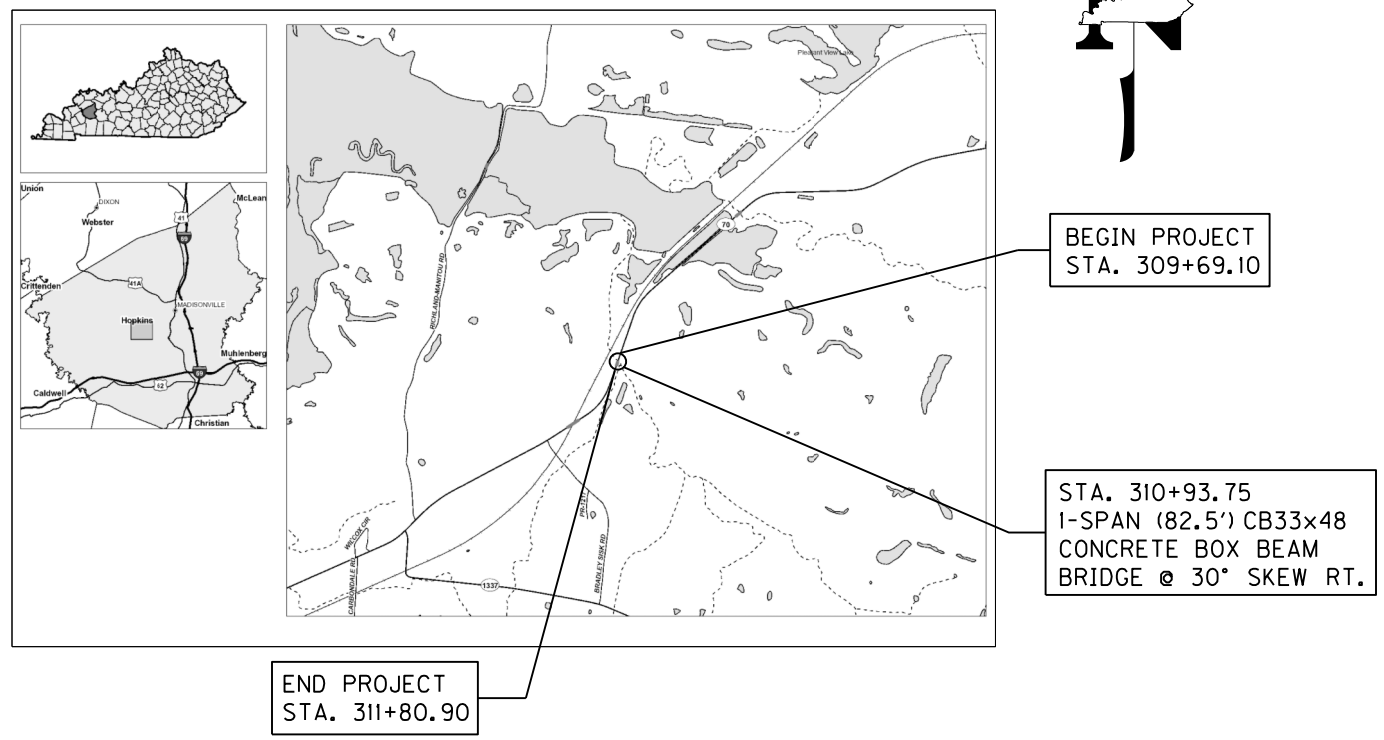

LOCATION MAP

BEFORE YOU DIG

The contractor is instructed to call 1-800-752-6007 to reach KY 811, the one-call system for information on the location of existing underground utilities. The call is to be placed a minimum of two (2) and no more than ten (10) business days prior to excavation. The contractor should be aware that owners of underground facilities are not required to be members of the KY 811 one-call Before-U-Dig (BUD) service. The contractor must coordinate excavation with the utility owners, including those whom do not subscribe to KY 811. It may be necessary for the contractor to contact the County Court Clerk to determine what utility companies have facilities in the area.

Existing Bridge ID # 054B00088N

DESIGN CRITERIA

CLASS OF HIGHWAY MAJOR COLLECTOR
TYPE OF TERRAIN
DESIGN SPEED
REQUIRED NPSD
REQUIRED PSD
LEVEL OF SERVICE
ADT PRESENT (2016) 2,327
ADT FUTURE ( )
DHV
D %
T %

GEOGRAPHIC COORDINATES

LATITUDE 37 DEGREES 17 MINUTES 14 SECONDS NORTH
LONGITUDE 87 DEGREES 34 MINUTES 48 SECONDS WEST

DESIGNED

% RESTRICTED SD
LEVEL OF SERVICE
MAX. DISTANCE W/O PASSING

REV. NO.	SHEETS REVISED	DATE
1	R1, R2, R3, S2 & ADDED S5	4/08/19

TABLE OF REVISIONS

PREPARED BY Stantec

BRIDGING KENTUCKY Restore | Renew | Replace

STATE OF KENTUCKY CHRISTOPHER D. PADGETT 27991 LICENSED PROFESSIONAL ENGINEER

STATE OF KENTUCKY ROBERT V. CATRON 32481 LICENSED PROFESSIONAL ENGINEER

REVISION	DATE

Commonwealth of Kentucky
DEPARTMENT OF HIGHWAYS
COUNTY OF
HOPKINS

ITEM NO. 2-10005
DRAWING NO. 27937
PROJECT NUMBER:
LETTING DATE: APRIL 26, 2019

RECOMMENDED BY: PROJECT MANAGER DATE:

PLAN APPROVED BY: STATE HIGHWAY ENGINEER DATE:

FILE NAME: $DGNSPEC$
USER: $USER$ DATE PLOTTED: $DATE$ $TIME$
E-SHEET NAME:
MicroStation v8.11.9.459

COUNTY OF	ITEM NO.	SHEET NO.
HOPKINS	2-10005	R2

CONVENTIONAL SIGNS

SURVEY LINE
GRADE LINE — 400' V.C.
GROUND LINE
COUNTY LINE
CORPORATE LIMITS
EXIST. PROPERTY LINE
EXIST. RIGHT OF WAY & PROPERTY LINE
PROPOSED RIGHT OF WAY
RIGHT OF WAY MONUMENT
BENCH MARK — B.M. NO.4
EXISTING R/W MARKER
RIGHT OF WAY MONUMENT EXISTING/PROPOSED
UTILITY TEST HOLE — TH
EXISTING ROAD
RAILROAD
FENCE (CONTROLLED ACCESS)
FENCE (EXCEPT STONE AND HEDGE)
TREE LINE
TREES
PIPE CULVERT
CULVERT
BRIDGE
BUILDINGS — 1-S FRAME, 1-S BRICK, SHED, 2-S BRICK
GUARDRAIL — END TREATMENT, GUARDRAIL, TERMINAL SECTION

	EXISTING	PROPOSED
LIGHTING POLE		
POWER POLE		
JOINT POWER & TELEPHONE POLE		
TELEPHONE & TELEGRAPH POLE		
ANCHOR, POWER OR TELEPHONE		
STUB POWER		
STUB TELEPHONE		
WATER MAIN	WM	6" WM
GAS MAIN	GM	6" GM
TELEPHONE DUCT	T	T
ELECTRIC DUCT	E	E
DIRECT BURIAL TV CABLE	TV	TV
SANITARY SEWER (WITH MANHOLE)	SAN	SAN
STORM SEWER (WITH MANHOLE)	STORM	STORM
DIRECT BURIAL ELECTRIC CABLE	E	E
DIRECT BURIAL TELEPHONE CABLE	T	T
OVERHEAD WIRE		
TRAFFIC LIGHTS		
ELECTRIC MANHOLE	EMH	EMH
TELEPHONE MANHOLE	TMH	TMH

STONE FENCE
HEDGE FENCE
SWAMP OR MARSH
SPRINGS
SINKHOLE
QUARRY SITE
BLUE LINE STREAM
INTERMITTENT STREAM OR DITCH
LAKES OR PONDS
REGULATED FLOODWAY
NORTH POINT

NOTES:

1. Material needed for shoulders outside of paved area will be measured and paid as GRANULAR EMBANKMENT in accordance with the Special Note for Bridge Overlay Approach Pavement
2. Varies 0' to 2'-0"

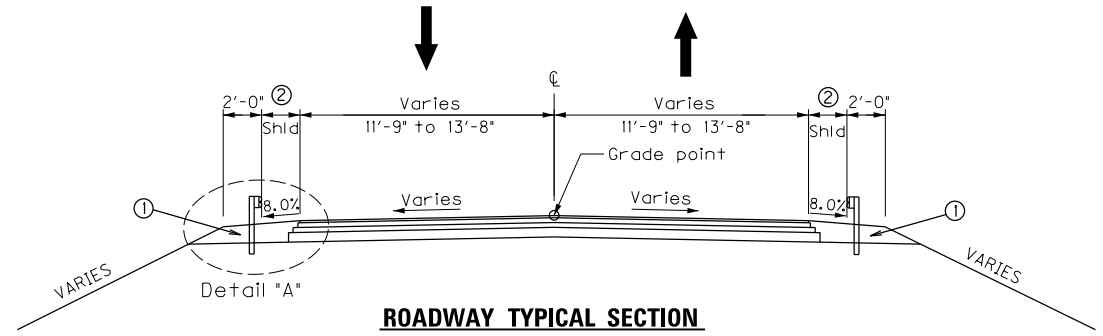

ROADWAY TYPICAL SECTION

KY 70 PAVEMENT

16.00" Base
- 8.00" DGA Base
- 4.00" CL2 Asph Base 1.00D PG64-22
- 4.00" CL2 Asph Base 1.00D PG64-22

1.25" Surface
- 1.25" CL2 Asph Surf 0.38D PG64-22

SHOULDERS

Granular Embankment

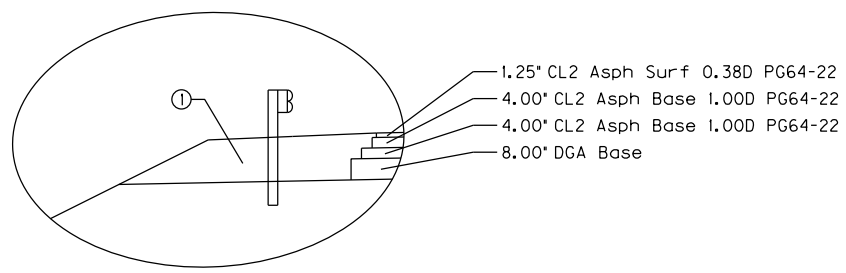

Detail "A"

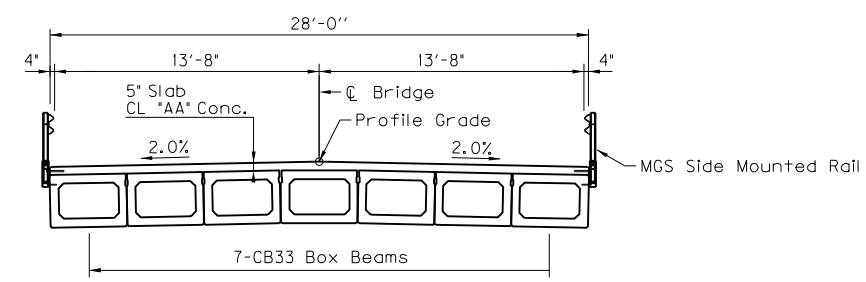

BRIDGE TYPICAL SECTION

NOT TO SCALE

PREPARED BY

BRIDGING KENTUCKY — Restore | Renew | Replace

TYPICAL SECTIONS & LEGEND
KY 70 - BEULAH RD.
OVER SUGAR CREEK

FILE NAME: $DGNSPEC$
USER: $USER$ DATE PLOTTED: $DATE$ $TIME$
E-SHEET NAME:
MicroStation v8.11.9.459

COUNTY OF	ITEM NO.	SHEET NO.
HOPKINS	2-10005	R2

CONVENTIONAL SIGNS

SURVEY LINE
GRADE LINE — 400' V.C.
GROUND LINE
COUNTY LINE
CORPORATE LIMITS
EXIST. PROPERTY LINE
EXIST. RIGHT OF WAY & PROPERTY LINE
PROPOSED RIGHT OF WAY
RIGHT OF WAY MONUMENT
BENCH MARK — B.M. NO.4
EXISTING R/W MARKER
RIGHT OF WAY MONUMENT EXISTING/PROPOSED
UTILITY TEST HOLE — TH
EXISTING ROAD
RAILROAD
FENCE (CONTROLLED ACCESS)
FENCE (EXCEPT STONE AND HEDGE)
TREE LINE
TREES
PIPE CULVERT
CULVERT
BRIDGE
BUILDINGS — 1-S FRAME, 1-S BRICK, SHED, 2-S BRICK
GUARDRAIL — END TREATMENT, GUARDRAIL, TERMINAL SECTION

	EXISTING	PROPOSED
LIGHTING POLE		
POWER POLE		
JOINT POWER & TELEPHONE POLE		
TELEPHONE & TELEGRAPH POLE		
ANCHOR, POWER OR TELEPHONE		
STUB POWER		
STUB TELEPHONE		
WATER MAIN	WM	6" WM
GAS MAIN	GM	6" GM
TELEPHONE DUCT	T	T
ELECTRIC DUCT	E	E
DIRECT BURIAL TV CABLE	TV	TV
SANITARY SEWER (WITH MANHOLE)	SAN	SAN
STORM SEWER (WITH MANHOLE)	STORM	STORM
DIRECT BURIAL ELECTRIC CABLE	E	E
DIRECT BURIAL TELEPHONE CABLE	T	T
OVERHEAD WIRE		
TRAFFIC LIGHTS		
ELECTRIC MANHOLE	EMH	EMH
TELEPHONE MANHOLE	TMH	TMH

STONE FENCE
HEDGE FENCE
SWAMP OR MARSH
SPRINGS
SINKHOLE
QUARRY SITE
BLUE LINE STREAM
INTERMITTENT STREAM OR DITCH
LAKES OR PONDS
REGULATED FLOODWAY
NORTH POINT

NOTES:

1. Material needed for shoulders outside of paved area will be measured and paid as GRANULAR EMBANKMENT in accordance with the Special Note for Bridge Overlay Approach Pavement
2. Varies 0' to 2'-0"

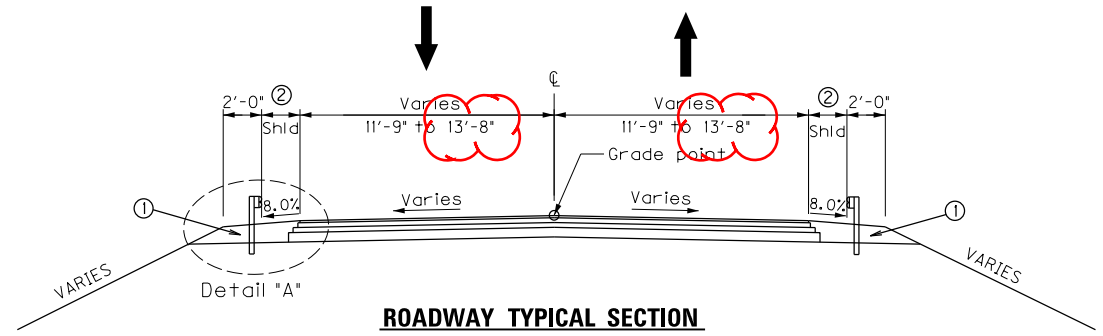

ROADWAY TYPICAL SECTION

KY 70 PAVEMENT

16.00" Base
- 8.00" DGA Base
- 4.00" CL2 Asph Base 1.00D PG64-22
- 4.00" CL2 Asph Base 1.00D PG64-22

1.25" Surface
- 1.25" CL2 Asph Surf 0.38D PG64-22

SHOULDERS

Granular Embankment

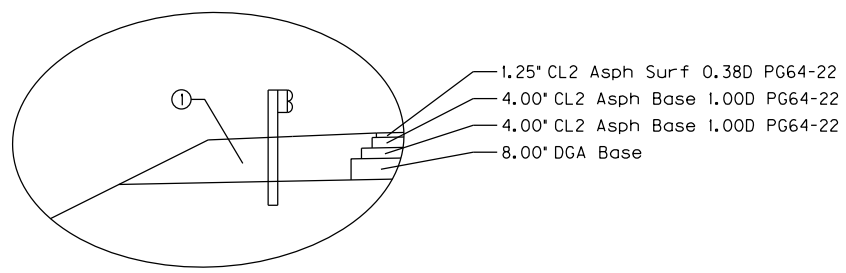

Detail "A"

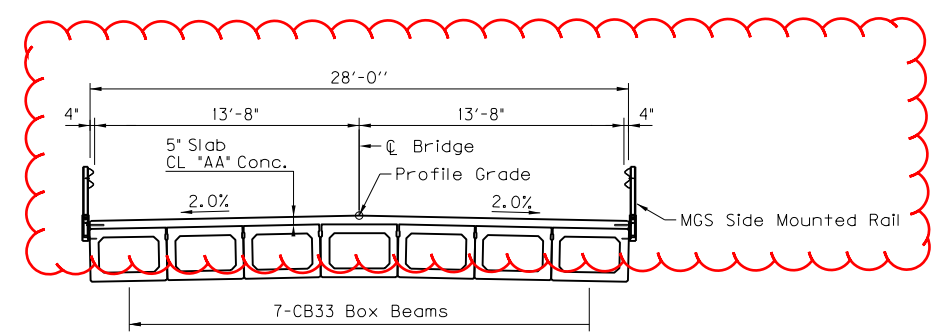

BRIDGE TYPICAL SECTION

NOT TO SCALE

PREPARED BY

BRIDGING KENTUCKY — Restore | Renew | Replace

TYPICAL SECTIONS & LEGEND
KY 70 - BEULAH RD.
OVER SUGAR CREEK

FILE NAME: $DGNSPEC$
USER: $USER$ DATE PLOTTED: $DATE$ $TIME$
E-SHEET NAME:
MicroStation v8.11.9.459

COUNTY OF	ITEM NO.	SHEET NO.
HOPKINS	2-10005	R3

PROJECT COORDINATES
Coordinates for horizontal control were obtained by redundant GPS observations using Trimble R10 GNSS receivers. On the NAD83 Kentucky State Plane Coordinate System, KY Single Zone, US Survey Feet utilizing the KYCORS RTN GPS Network on December 17th, 2018. Coordinates shown are State Plane Coordinates, US Survey Feet. No project datum factor was calculated or used for this project.

BASIS OF ELEVATIONS
Elevations were established by redundant S7 Robot and GPS observations NAVD88 vertical datum, Geoid 12B utilizing the KYCORS RTN Network.

CONSTRUCTION NOTE:

CONTRACTOR IS TO MAINTAIN ACCESS TO ENTRANCE AT LT. STA. 310+35.67 DURING CONSTRUCTION

STA. 310+93.5 REMOVE EXIST. 3-SPAN PRESTRESSED CONCRETE BOX BEAM BRIDGE, ABUTMENTS AND PIERS

LT. STA. 311+40.6 TO STA. 311+80.9
REMOVE 43 L.F. GUARDRAIL

LT. STA. 311+43.4 TO STA. 311+80.9 CONST.
37.5 L.F. GUARDRAIL-STEEL W BEAM-S FACE,
CONNECT TO BRIDGE RAIL SYSTEM MGS
AND TIE TO EXISTING GUARDRAIL

LT. STA. 310+22.00 CONST.
12' ENTRANCE W/ 77 SY DGA (4")
& QUANTITY IS INCIDENTAL TO
BID ITEM NO. 8003 FOUNDATION PREP.

LT. STA. 310+33.8 TO STA. 310+59.4 CONST.
37.5 L.F. GUARDRAIL-STEEL W BEAM-S FACE
WITH 1-TERMINAL SECTION NO. 1
CONNECT TO BRIDGE RAIL SYSTEM MGS

LT. STA. 310+54.00
REPLACE ENTRANCE PIPE
36' ~ 24" CMP

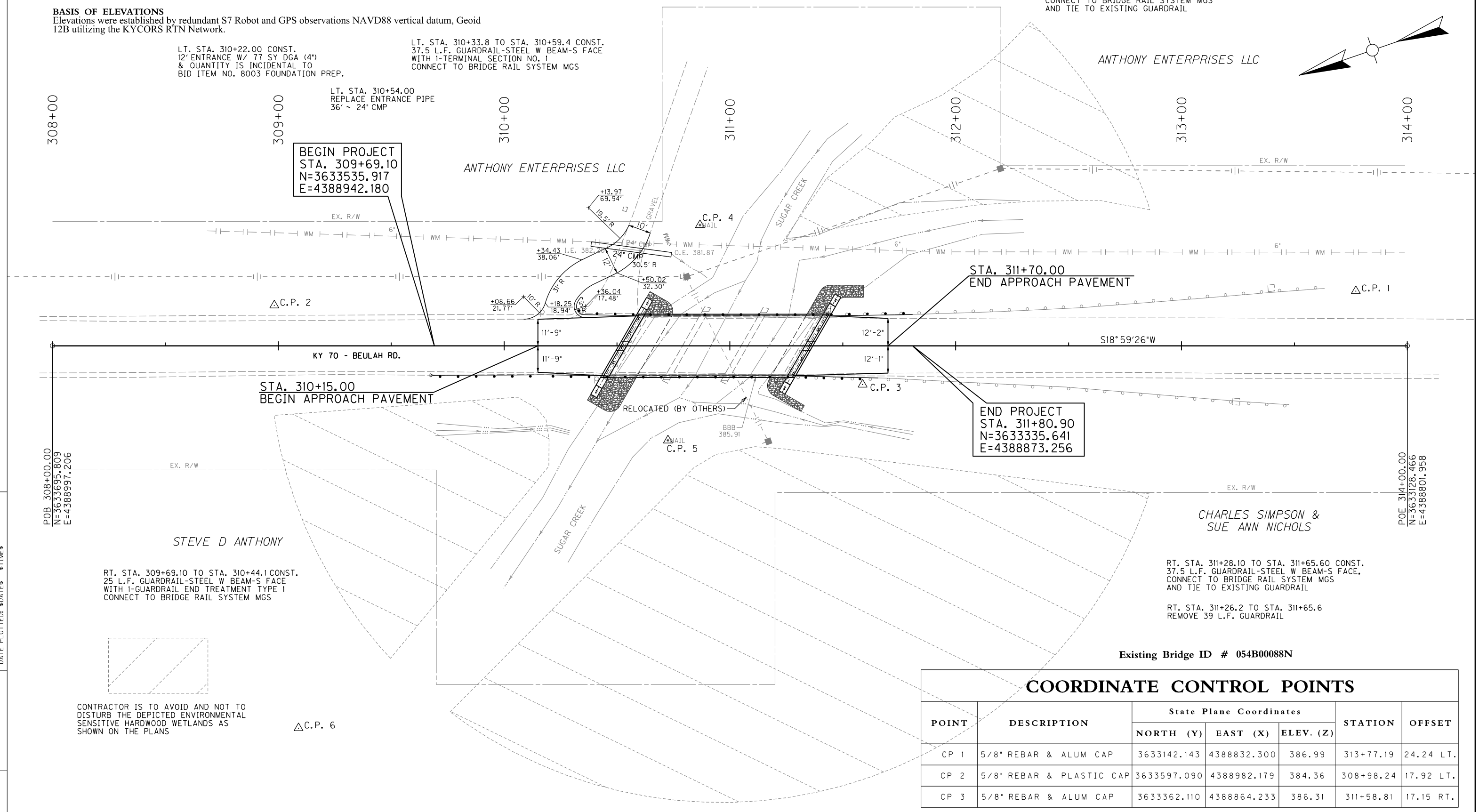

Existing Bridge ID # 054B00088N

COORDINATE CONTROL POINTS

POINT	DESCRIPTION	State Plane Coordinates			STATION	OFFSET
		NORTH (Y)	EAST (X)	ELEV. (Z)		
CP 1	5/8" REBAR & ALUM CAP	3633142.143	4388832.300	386.99	313+77.19	24.24 LT.
CP 2	5/8" REBAR & PLASTIC CAP	3633597.090	4388982.179	384.36	308+98.24	17.92 LT.
CP 3	5/8" REBAR & ALUM CAP	3633362.110	4388864.233	386.31	311+58.81	17.15 RT.

SCALE: 1"=40'

PREPARED BY

BRIDGING KENTUCKY
Restore | Renew | Replace

PLAN SHEET
KY 70 - BEULAH RD.
OVER SUGAR CREEK

FILE NAME: $DGNSPEC$
USER: $USER$
DATE PLOTTED: $DATE$ $TIME$
E-SHEET NAME:
MicroStation v8.11.9.459

COUNTY OF	ITEM NO.	SHEET NO.
HOPKINS	2-10005	R3

PROJECT COORDINATES
Coordinates for horizontal control were obtained by redundant GPS observations using Trimble R10 GNSS receivers. On the NAD83 Kentucky State Plane Coordinate System, KY Single Zone, US Survey Feet utilizing the KYCORS RTN GPS Network on December 17th, 2018. Coordinates shown are State Plane Coordinates, US Survey Feet. No project datum factor was calculated or used for this project.

BASIS OF ELEVATIONS
Elevations were established by redundant S7 Robot and GPS observations NAVD88 vertical datum, Geoid 12B utilizing the KYCORS RTN Network.

CONSTRUCTION NOTE:

CONTRACTOR IS TO MAINTAIN ACCESS TO ENTRANCE AT LT. STA. 310+35.67 DURING CONSTRUCTION

STA. 310+93.5 REMOVE EXIST. 3-SPAN PRESTRESSED CONCRETE BOX BEAM BRIDGE, ABUTMENTS AND PIERS

LT. STA. 311+40.6 TO STA. 311+80.9
REMOVE 43 L.F. GUARDRAIL

LT. STA. 311+43.4 TO STA. 311+80.9 CONST.
37.5 L.F. GUARDRAIL-STEEL W BEAM-S FACE,
CONNECT TO BRIDGE RAIL SYSTEM MGS
AND TIE TO EXISTING GUARDRAIL

LT. STA. 310+22.00 CONST.
12' ENTRANCE W/ 77 SY DGA (4")
& QUANTITY IS INCIDENTAL TO
BID ITEM NO. 8003 FOUNDATION PREP.

LT. STA. 310+33.8 TO STA. 310+59.4 CONST.
37.5 L.F. GUARDRAIL-STEEL W BEAM-S FACE
WITH 1-TERMINAL SECTION NO. 1
CONNECT TO BRIDGE RAIL SYSTEM MGS

LT. STA. 310+54.00
REPLACE ENTRANCE PIPE
36' ~ 24" CMP

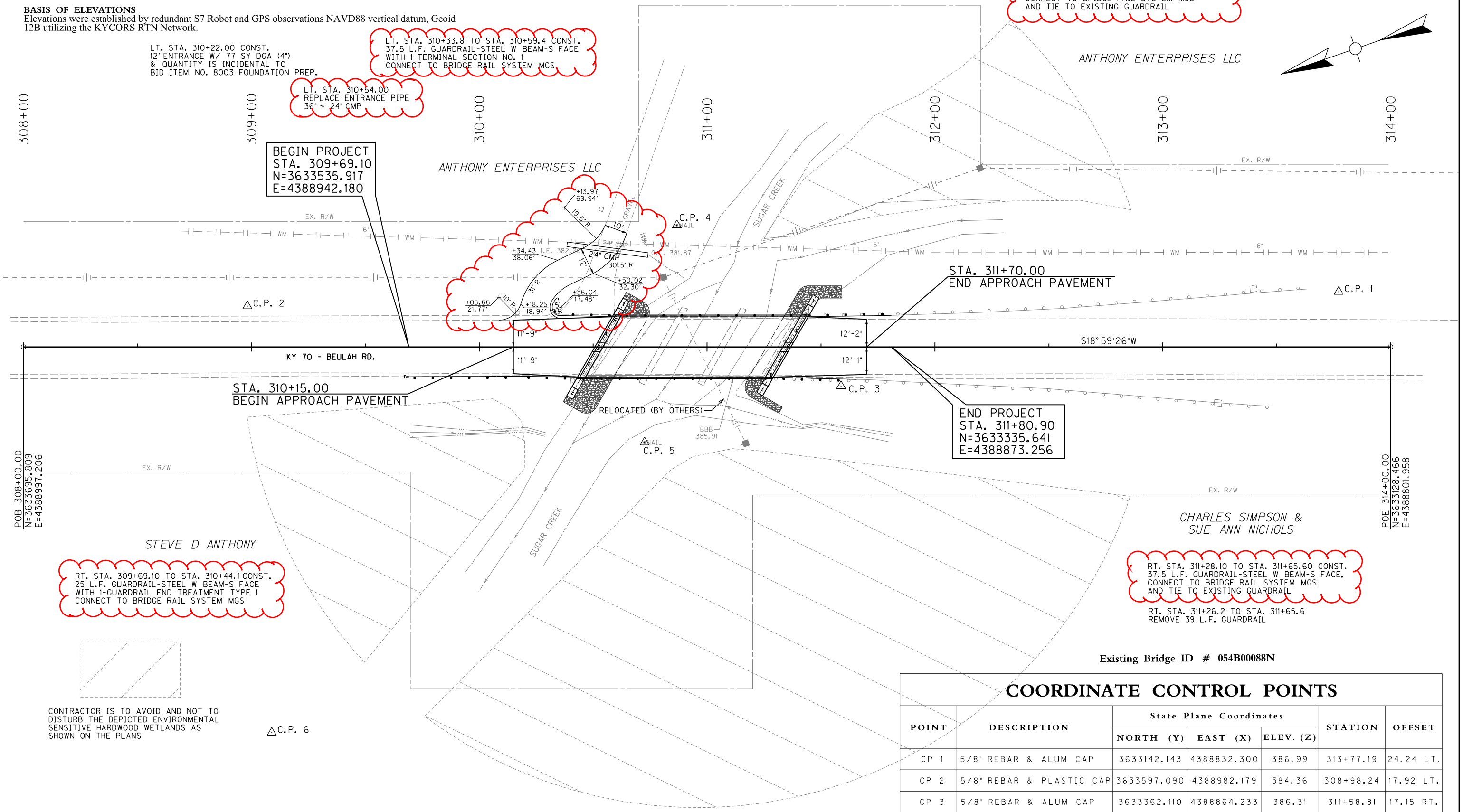

Existing Bridge ID # 054B00088N

COORDINATE CONTROL POINTS

POINT	DESCRIPTION	State Plane Coordinates			STATION	OFFSET
		NORTH (Y)	EAST (X)	ELEV. (Z)		
CP 1	5/8" REBAR & ALUM CAP	3633142.143	4388832.300	386.99	313+77.19	24.24 LT.
CP 2	5/8" REBAR & PLASTIC CAP	3633597.090	4388982.179	384.36	308+98.24	17.92 LT.
CP 3	5/8" REBAR & ALUM CAP	3633362.110	4388864.233	386.31	311+58.81	17.15 RT.

SCALE: 1"=40'

PREPARED BY

BRIDGING KENTUCKY
Restore | Renew | Replace

PLAN SHEET
KY 70 - BEULAH RD.
OVER SUGAR CREEK

FILE NAME: $DGNSPEC$
USER: $USER$
DATE PLOTTED: $DATE$ $TIME$
E-SHEET NAME:
MicroStation v8.11.9.459

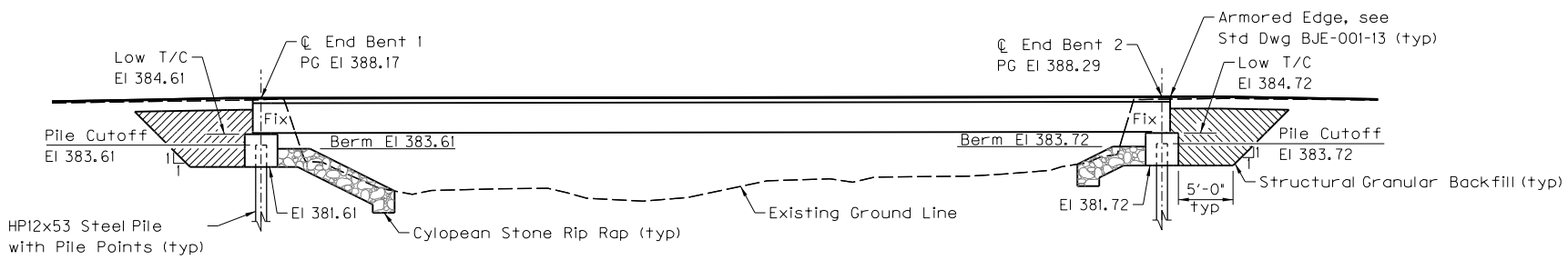

PROFILE

84'-0" PPC Box Beam CB33x48 ~ Single Span
HL-93 (+25%) Live Load
30° Skew Rt ~ 27'-4" Bridge Roadway Width

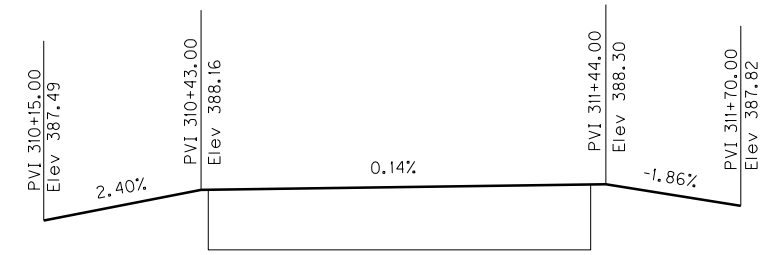

PROFILE GRADE

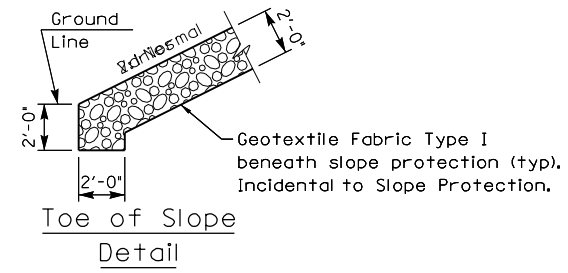

Toe of Slope
Detail

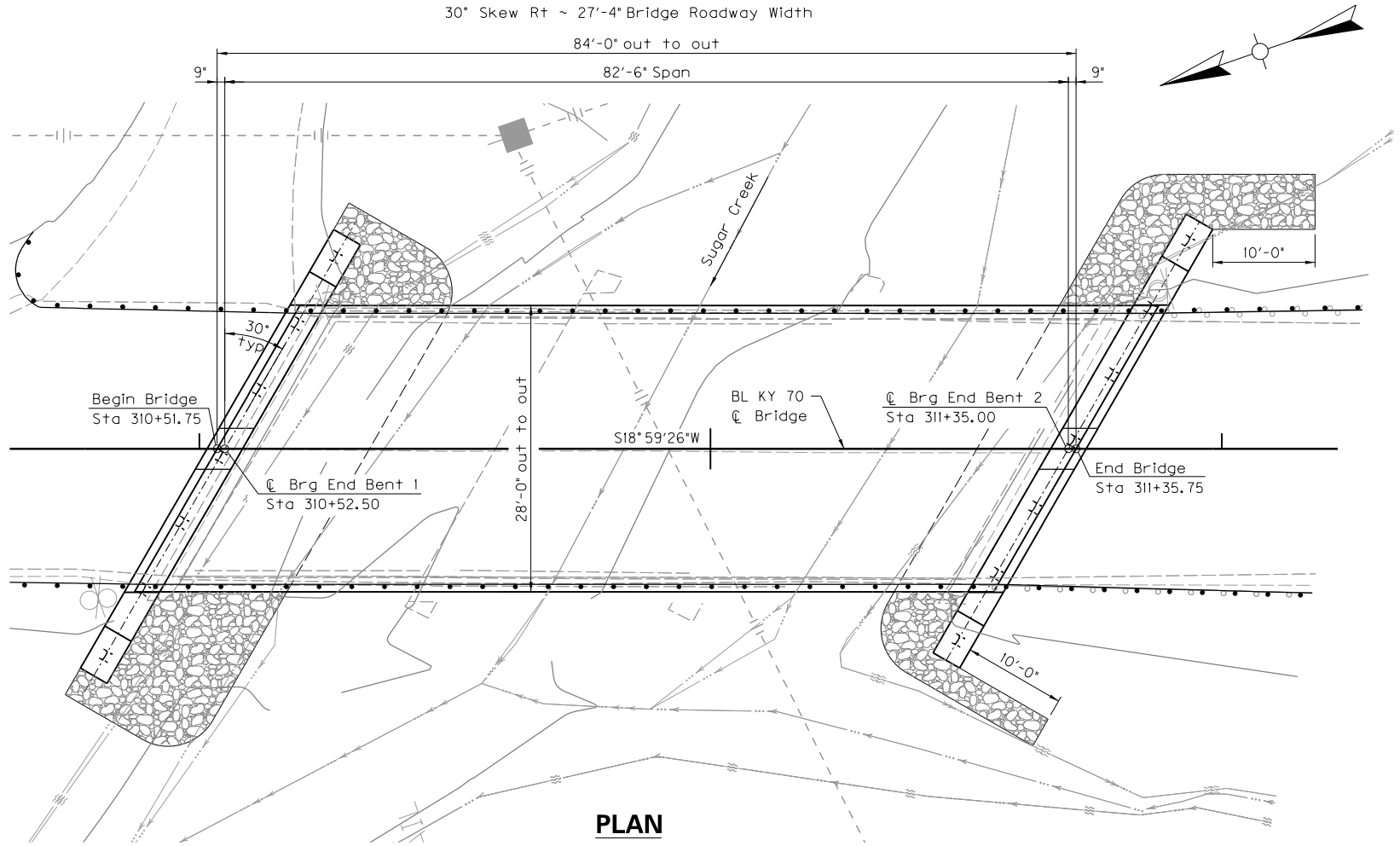

PLAN

12" wide Mastic Tape to waterproof the joint between abutment and slab. The tape shall be looped as shown to allow for movement without damage to the tape. See the General Notes.

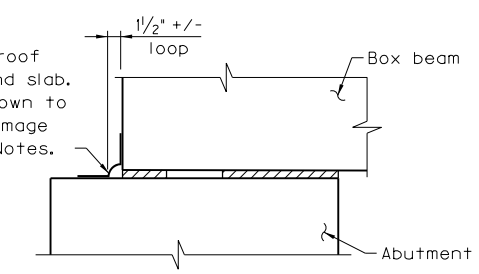

JOINT WATERPROOFING DETAIL

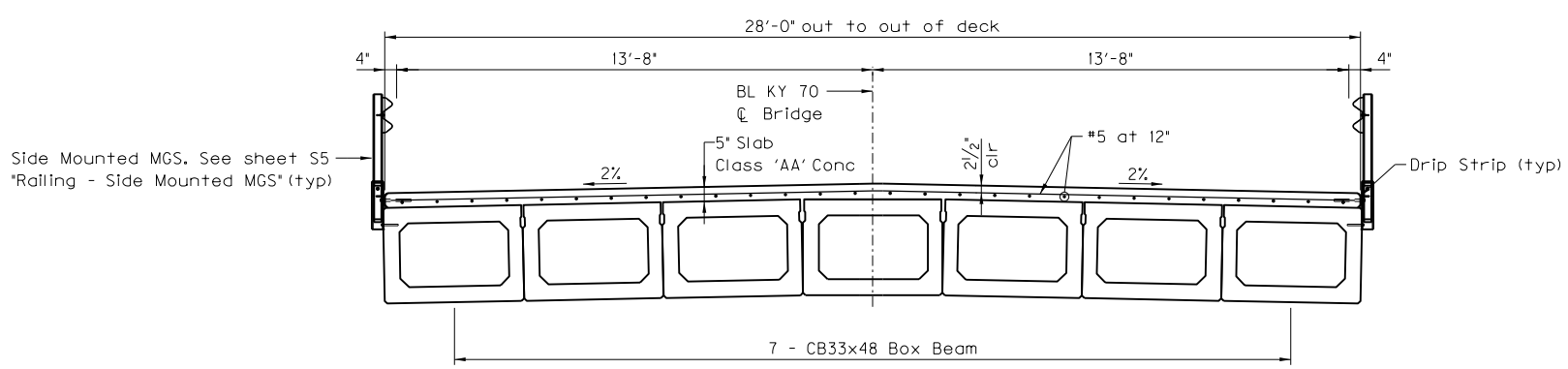

TYPICAL SECTION

Note: All reinforcement shall be epoxy coated

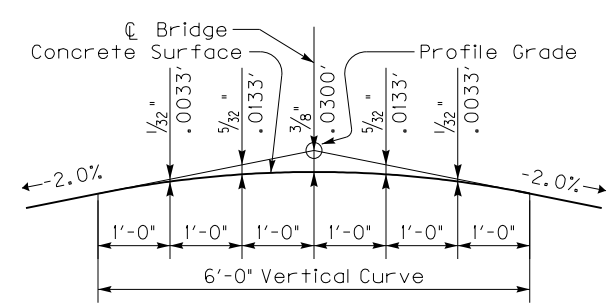

PARABOLIC CROWN

REVISION	DATE

DATE: April 26, 2019	CHECKED BY
DESIGNED BY: R. Catron	C. Greenwell
DETAILED BY: R. Catron	R. Catron

Commonwealth of Kentucky
DEPARTMENT OF HIGHWAYS

COUNTY: HOPKINS

ROUTE: KY 70

CROSSING: SUGAR CREEK

LAYOUT

ITEM NUMBER: 2–10005

PREPARED BY: Stantec

BRIDGING KENTUCKY

SHEET NO. S2

DRAWING NO. 27937

FILE NAME: ...\Structures\Drawing\S02_Layout
USER: srparsons
DATE PLOTTED: 4/5/2019 7:36:49 AM
E-SHEET NAME:
MicroStation v8.11.9.832

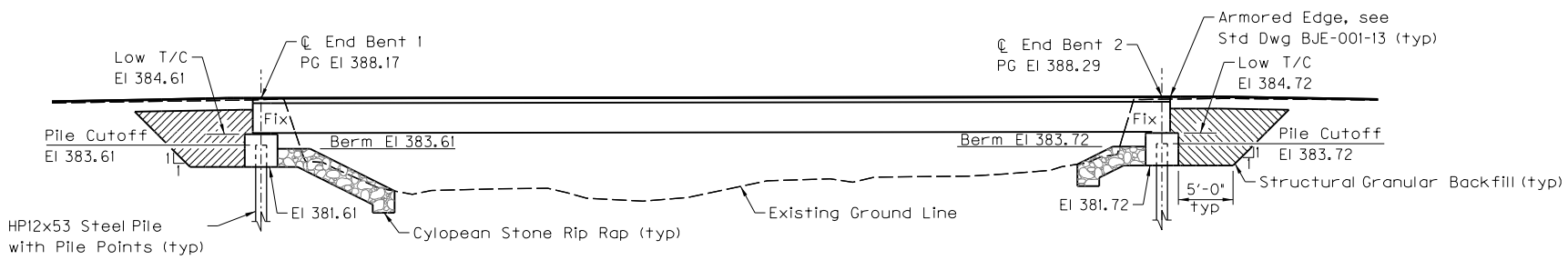

PROFILE

84'-0" PPC Box Beam CB33x48 ~ Single Span
HL-93 (+25%) Live Load
30° Skew Rt ~ 27'-4" Bridge Roadway Width

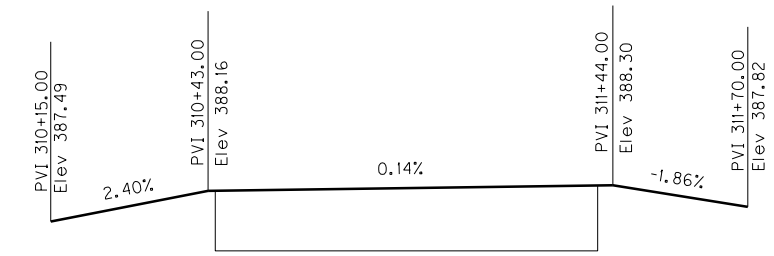

PROFILE GRADE

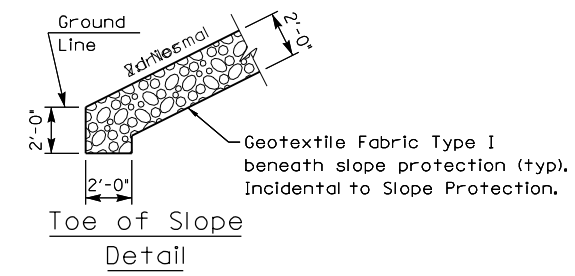

Toe of Slope
Detail

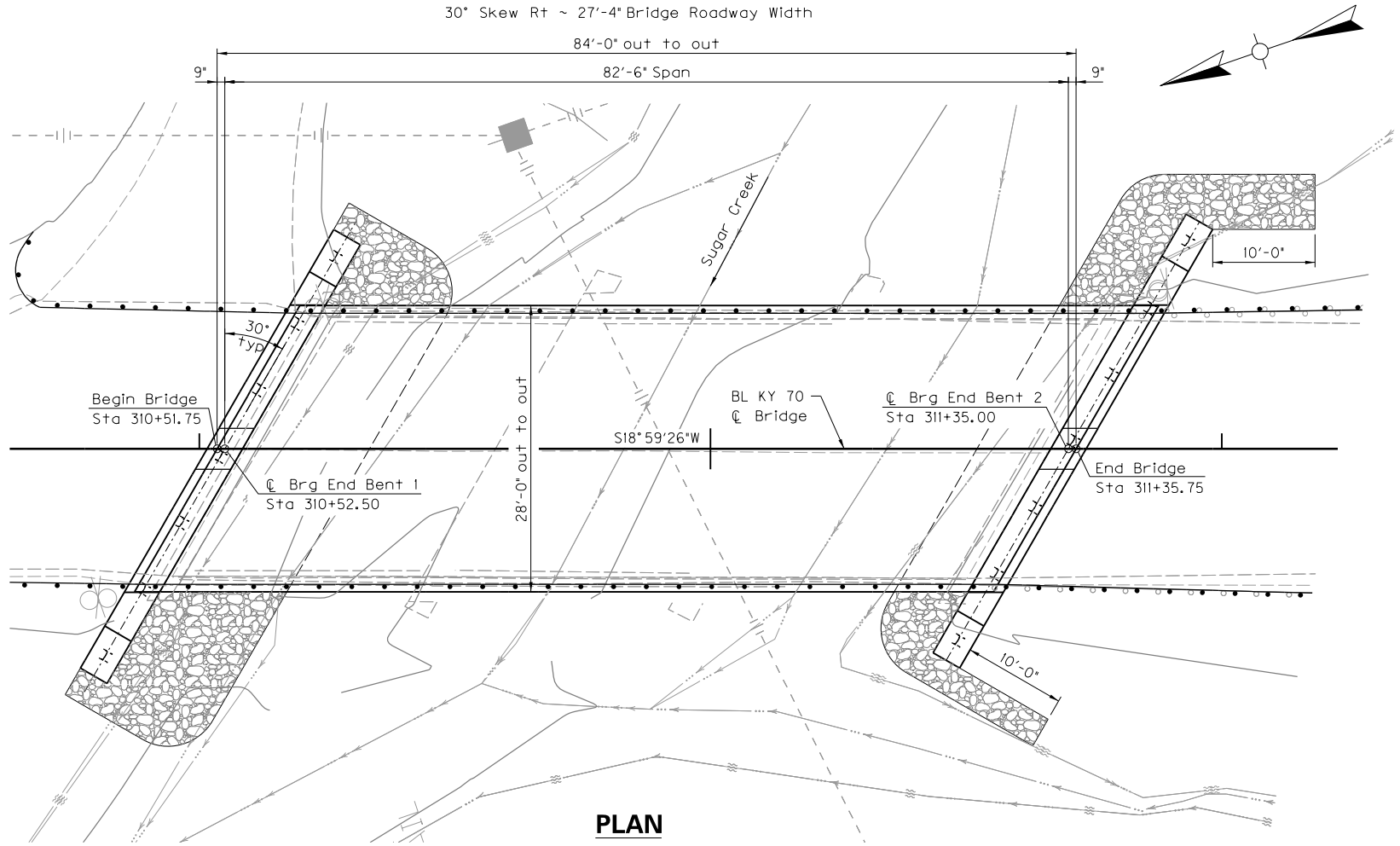

PLAN

12" wide Mastic Tape to waterproof the joint between abutment and slab. The tape shall be looped as shown to allow for movement without damage to the tape. See the General Notes.

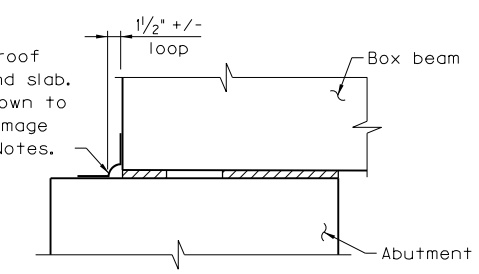

JOINT WATERPROOFING DETAIL

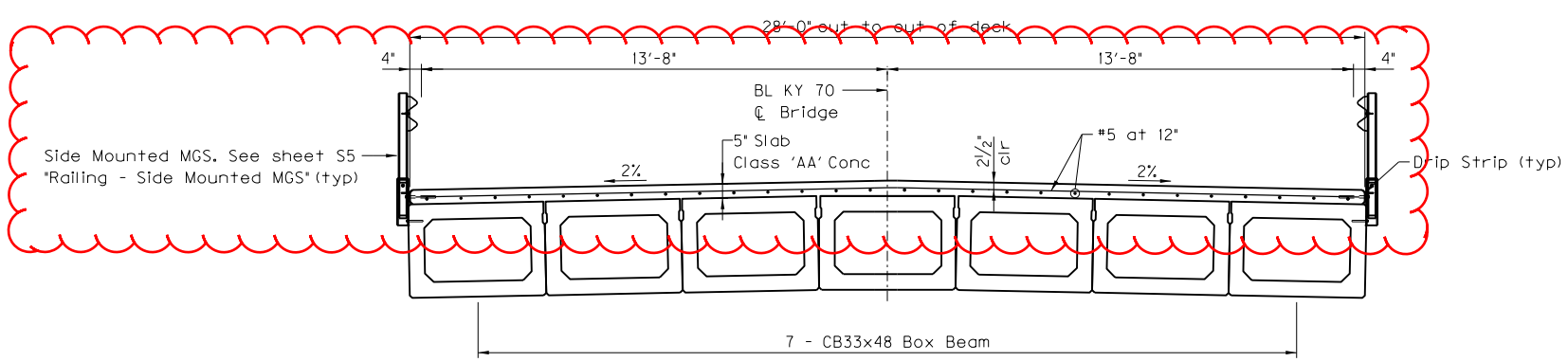

TYPICAL SECTION

Note: All reinforcement shall be epoxy coated

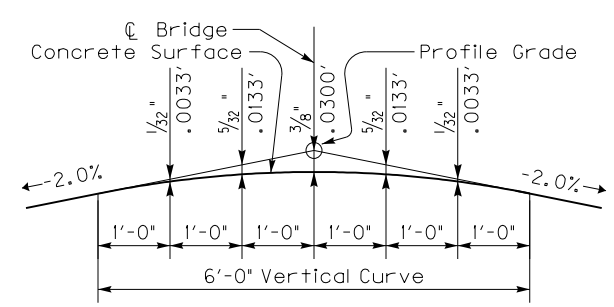

PARABOLIC CROWN

REVISION	DATE

DATE: April 26, 2019	CHECKED BY
DESIGNED BY: R. Catron	C. Greenwell
DETAILED BY: R. Catron	R. Catron

Commonwealth of Kentucky
DEPARTMENT OF HIGHWAYS

COUNTY: HOPKINS

ROUTE: KY 70

CROSSING: SUGAR CREEK

LAYOUT

ITEM NUMBER: 2–10005

PREPARED BY: Stantec

BRIDGING KENTUCKY

SHEET NO. S2

DRAWING NO. 27937

FILE NAME: ...\Structures\Drawing\S02_Layout
USER: srparsons
DATE PLOTTED: 4/5/2019 7:36:49 AM
E-SHEET NAME:
MicroStation v8.11.9.832

Contrary to Standard Drawings for Guardrail, place splices between posts off of bridge as shown.

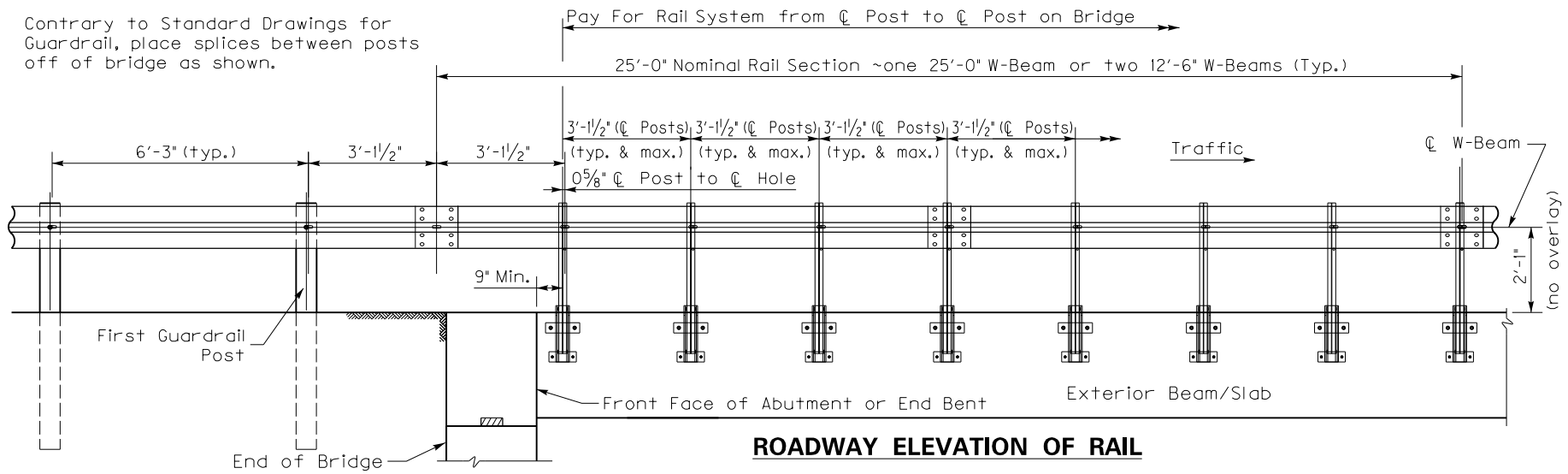

ROADWAY ELEVATION OF RAIL

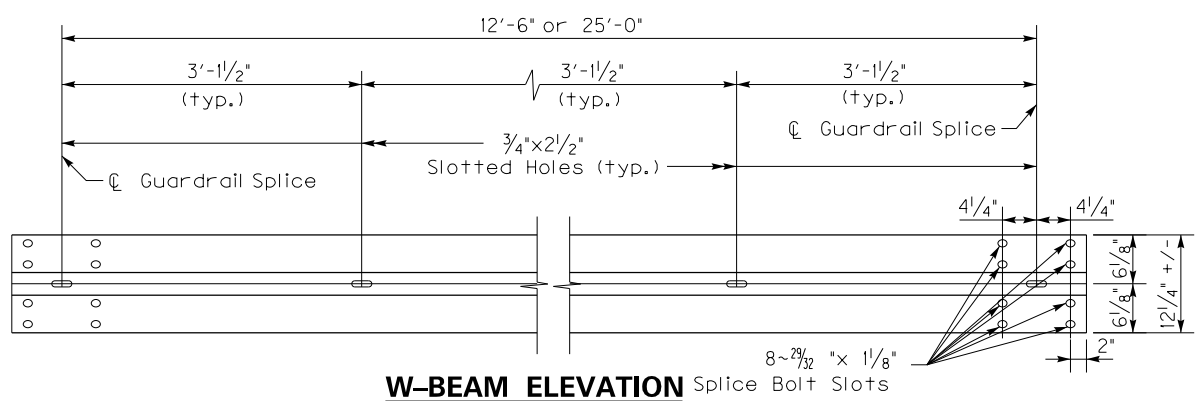

W-BEAM ELEVATION

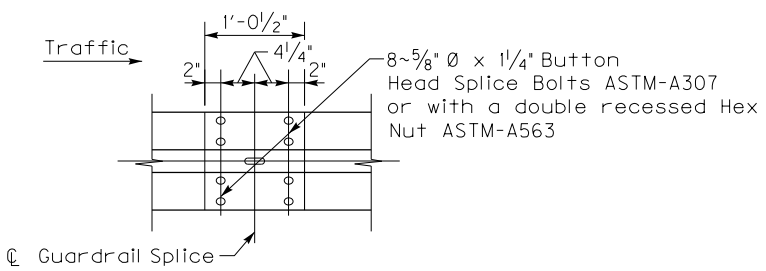

W-BEAM SPLICE ELEVATION

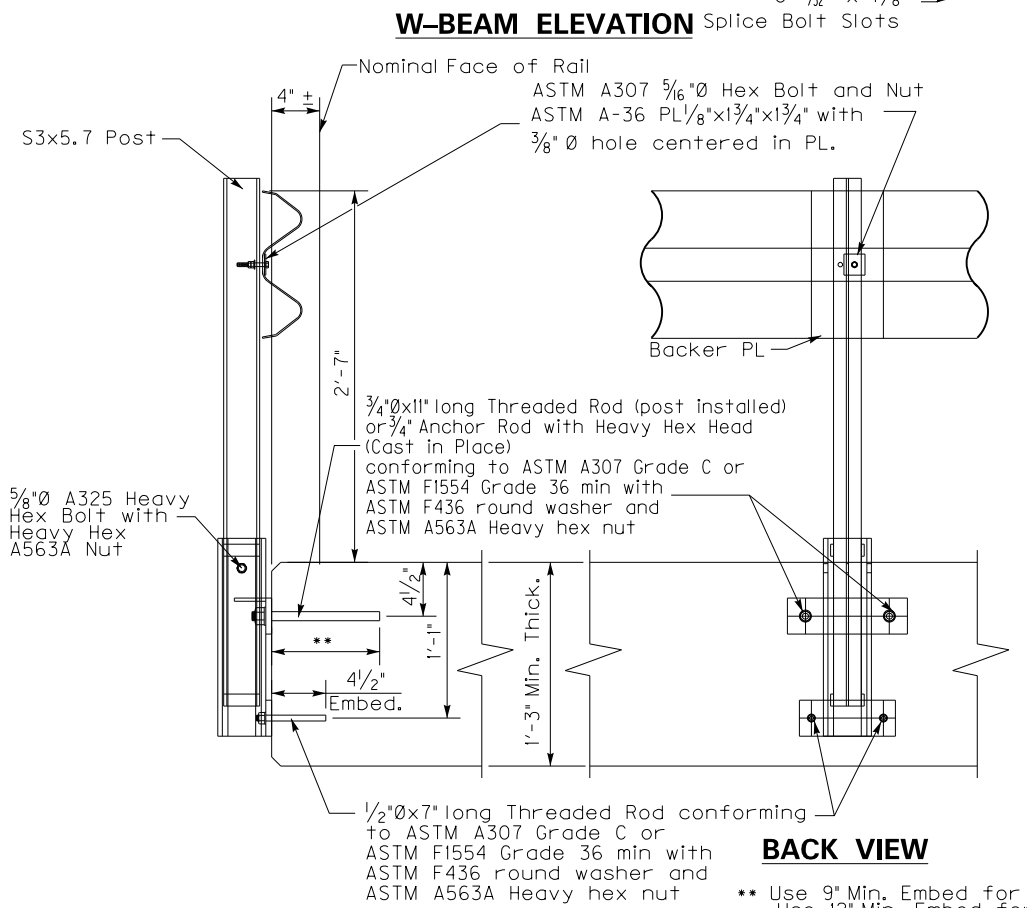

BACK VIEW

X-SECTION VIEW

** Use 9" Min. Embed for Threaded Rod post installed
Use 12" Min. Embed for Headed Anchors Cast in Place

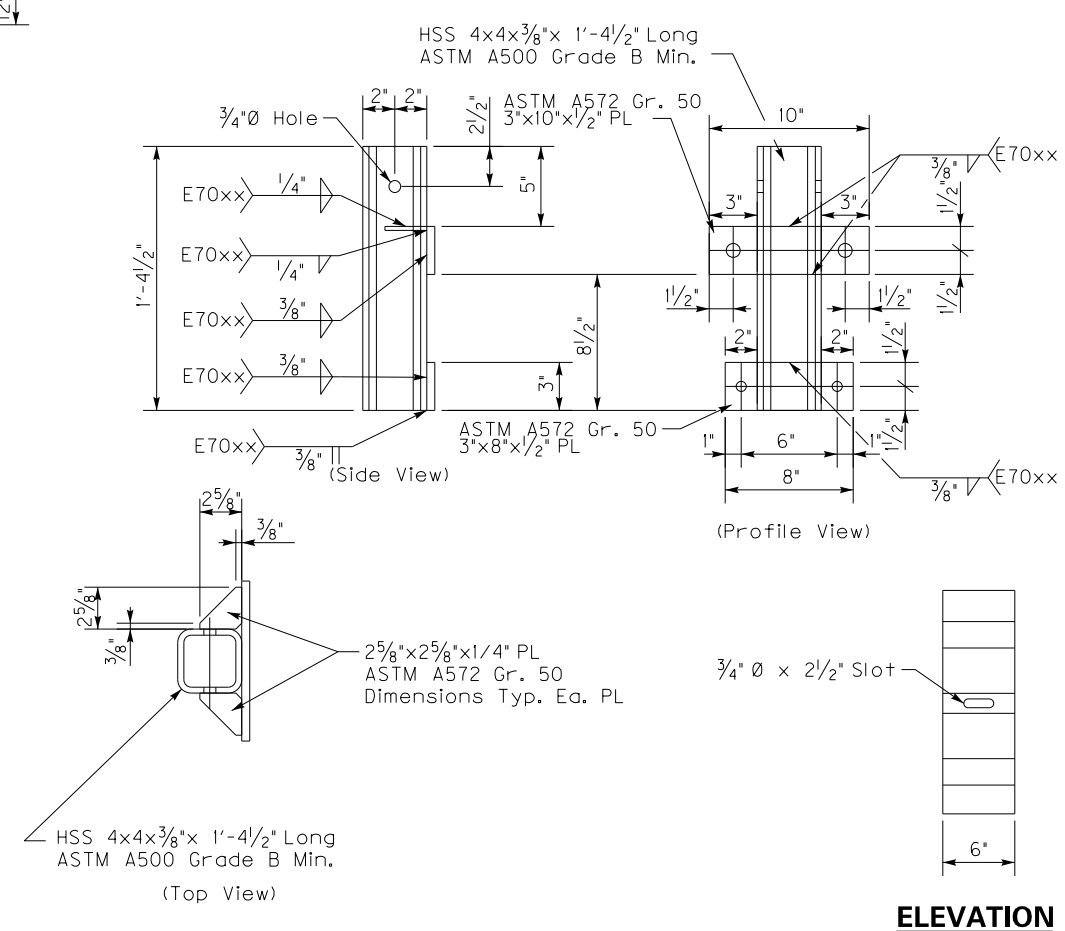

MOUNTING BRACKET

ELEVATION
(Backer Plate)

SIDE VIEW
(Backer Plate)

TRANSITION AND END TREATMENT NOTES:
This traffic railing must be anchored by a minimum of 25 feet of guardrail. This 25 feet at each corner of the bridge is to be paid with the roadway plans. See roadway plans for layout.

CONSTRUCTION NOTES:
Face of rail post must be plumb unless otherwise approved by the Engineer. Post must be perpendicular to adjacent roadway grade. Fully anchored guardrail must be attached to each end of rail. Typical guardrail construction as indicated above and not bridge rail transition or bridge end connector. It is recommended that the bridge plans show rail post locations. Round or chamfer exposed edges of rail posts and backer Plate to approximately 1/16" by grinding. Shop drawings are not required. Threaded rod may be cast in the beam/slab or may be drilled and epoxy grouted. Epoxy grout must conform to Section 826 and must have a minimum bond strength of 1,305 psi. Follow all manufacturers recommendations for installation.

MATERIAL NOTES:
All components must be supplied galvanized including fasteners, anchor rods, threaded rods, etc. Galvanize all steel components after fabrication in accordance with ASTM A123. W-beam must meet the requirements of Std. Dwg. RBR-001-12 except as modified in these plans. The contractor may furnish rail elements of 25'-0" or 12'-6" (Nominal) lengths. W-beam must have slotted holes at 3'-1½".

GENERAL NOTES:
This railing has been successfully evaluated by full scale crash test to meet MASH TL-3 criteria. This railing can be used for speeds 50 mph and greater.
This rail is designed to deflect approximately 4' - 4'-6" as it contains and redirects the errant vehicle. This rail may not be installed on top of or behind curbs that project above finished grade, on bridges with expansion joints providing more than 5" of movement, on retaining walls, or on grade separations and interchanges.
Repairs to impact-damaged post and mounting bracket unit are not permitted. Replace all impact-damaged posts with a new post. If mounting bracket is visibly damaged, replace the bracket with a new one as well.
Average weight of railing with no overlay: 19 plf total.

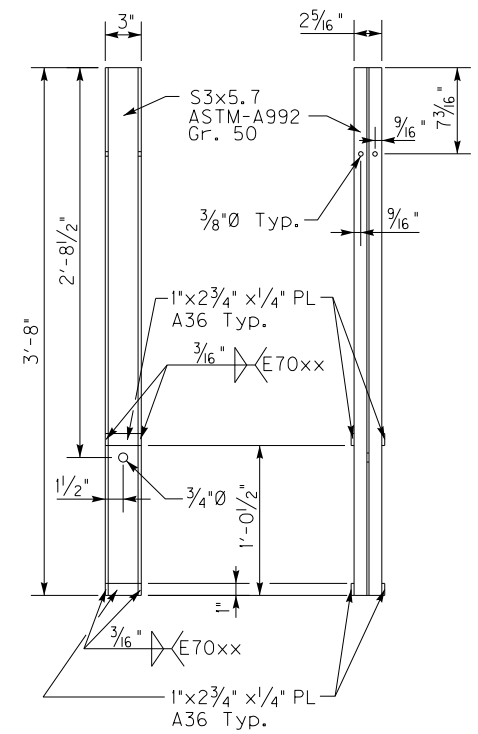

POST ELEVATION

Note: Fabricator may elect to provide a ¾"Ø ASTM A563A heavy hex sleeve nut with a minimum length of 2¼" and minimum 1¼" across the flats along with threaded rod and the Anchor Rod. Maintain 12" minimum embedment with the ¾" Anchor Rod behind the sleeve nut. The fabricator may elect to provide a ½" ferrule insert for the bottom anchors with a minimum length of 2¾" and a safe working load of 2000 lbs in tension and shear along with the threaded rod. Alternatively, the bottom anchors may also be supplied with a ½"Ø ASTM A563A heavy hex sleeve nut with a minimum length of 1½" and a minimum of ⅞" across the flats. Maintain 4½" embedment behind the sleeve nut. All costs for sleeve nuts, threaded rods, anchor rods, etc. are incidental to the price bid for the Railing System Side Mounted MGS.

REVISION	DATE

DATE: APRIL 26, 2019	CHECKED BY
DESIGNED BY: R. Catron	C. Greenwell
DETAILED BY: S. Parsons	R. Catron

Commonwealth of Kentucky
DEPARTMENT OF HIGHWAYS

COUNTY: HOPKINS

ROUTE: KY 70 | CROSSING: SUGAR CREEK

RAILING – SIDE MOUNTED MGS

ITEM NUMBER
2–10005

PREPARED BY: Stantec

BRIDGING KENTUCKY — Restore | Renew | Replace

SHEET NO. S5

DRAWING NO. 27937

FILE NAME: ...\S05_Side Mounted MGS Railing.dgn
USER: srparsons
DATE PLOTTED: 4/5/2019 7:42:03 AM
E-SHEET NAME:
MicroStation v8.11.9.832

Contrary to Standard Drawings for Guardrail, place splices between posts off of bridge as shown.

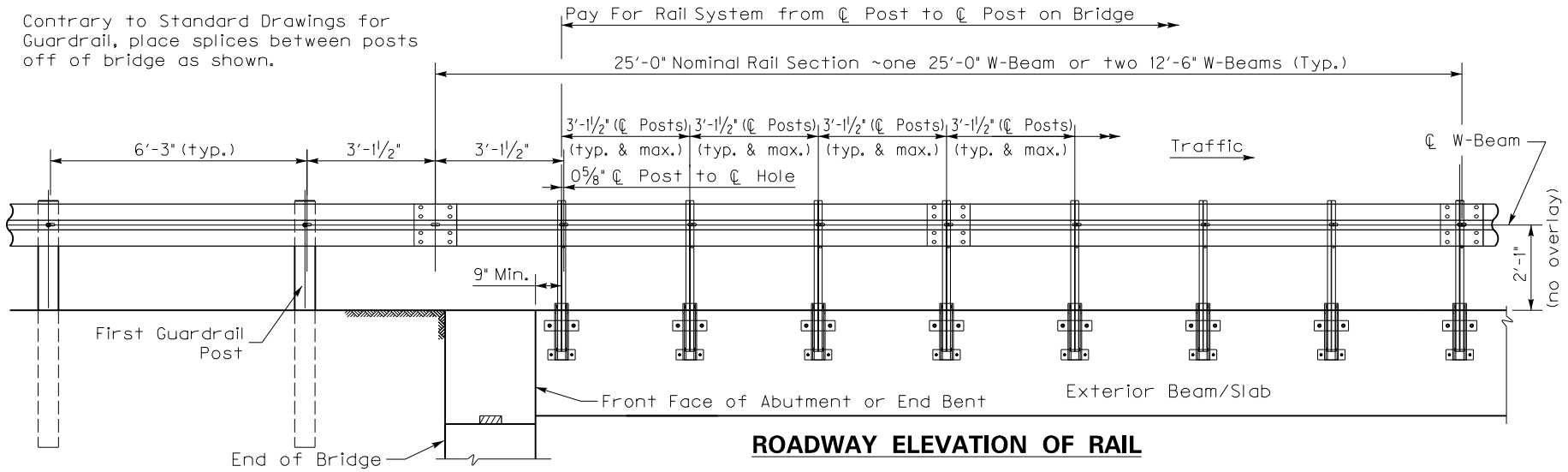

ROADWAY ELEVATION OF RAIL

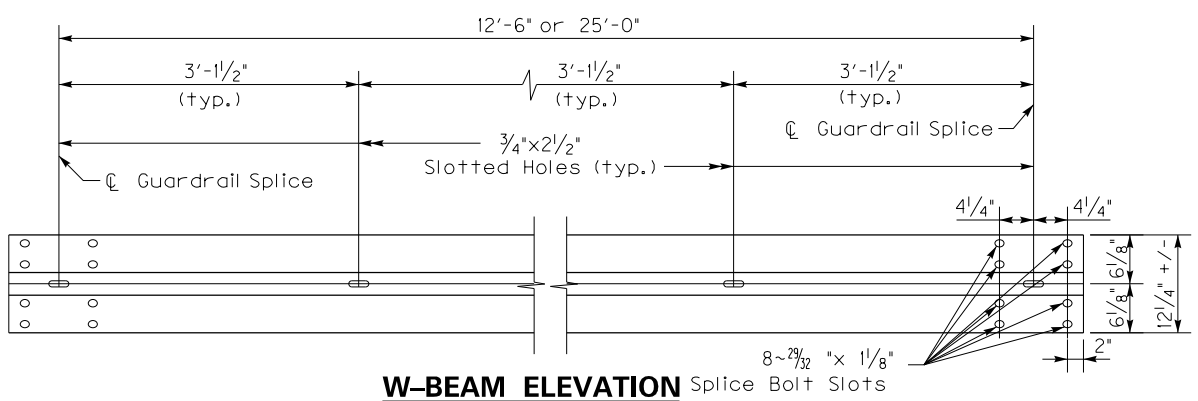

W-BEAM ELEVATION

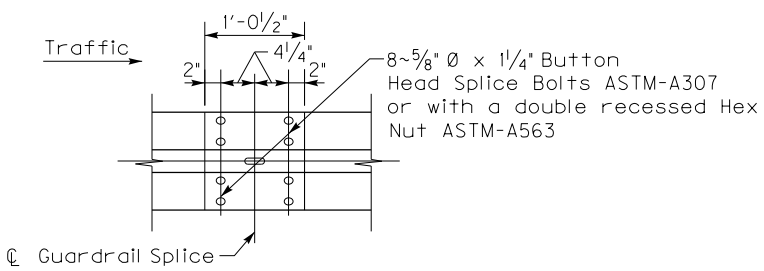

W-BEAM SPLICE ELEVATION

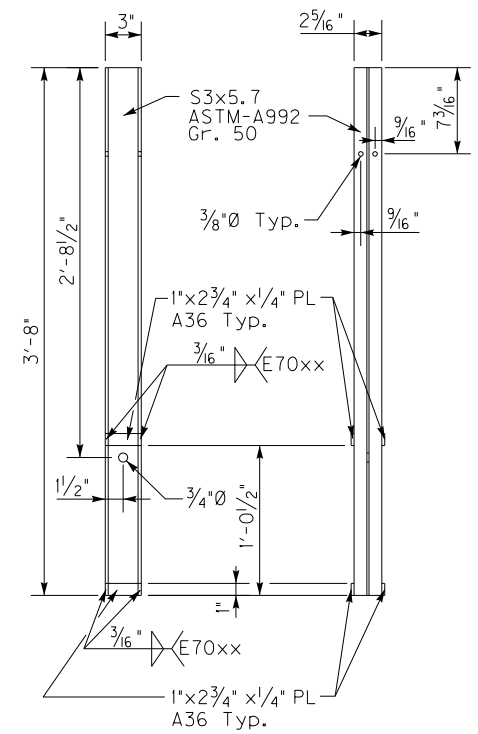

POST ELEVATION

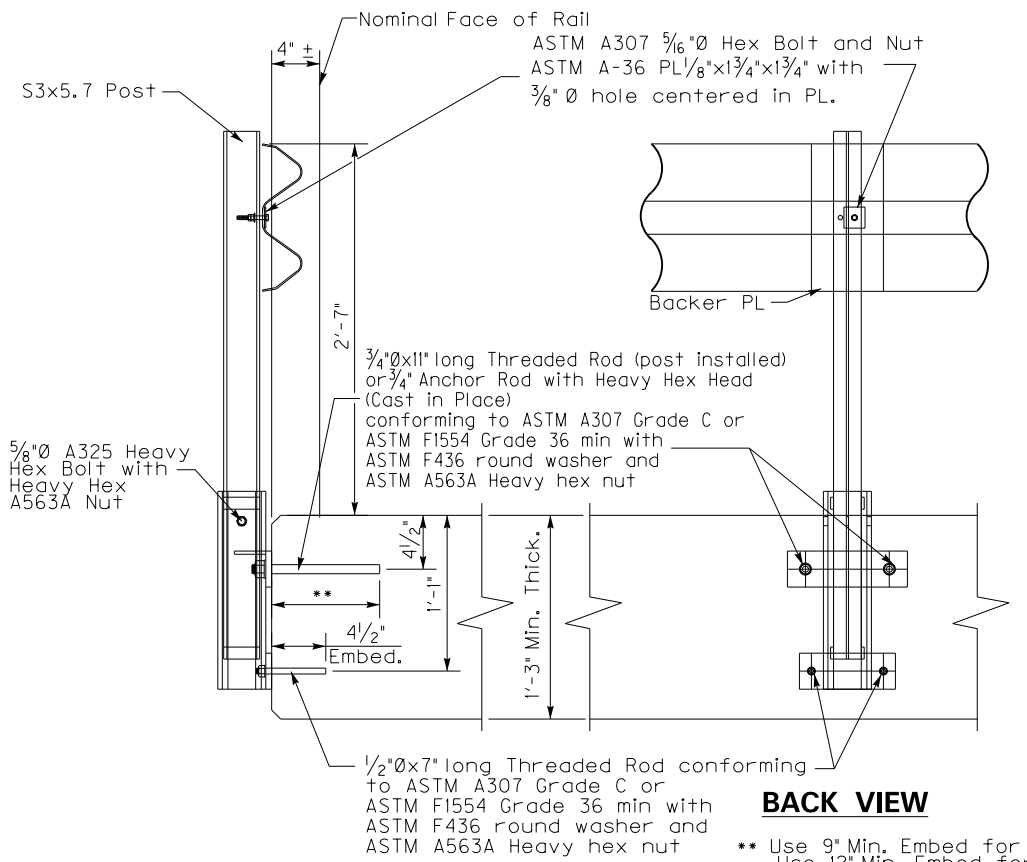

BACK VIEW

X-SECTION VIEW

** Use 9" Min. Embed for Threaded Rod post installed
Use 12" Min. Embed for Headed Anchors Cast in Place

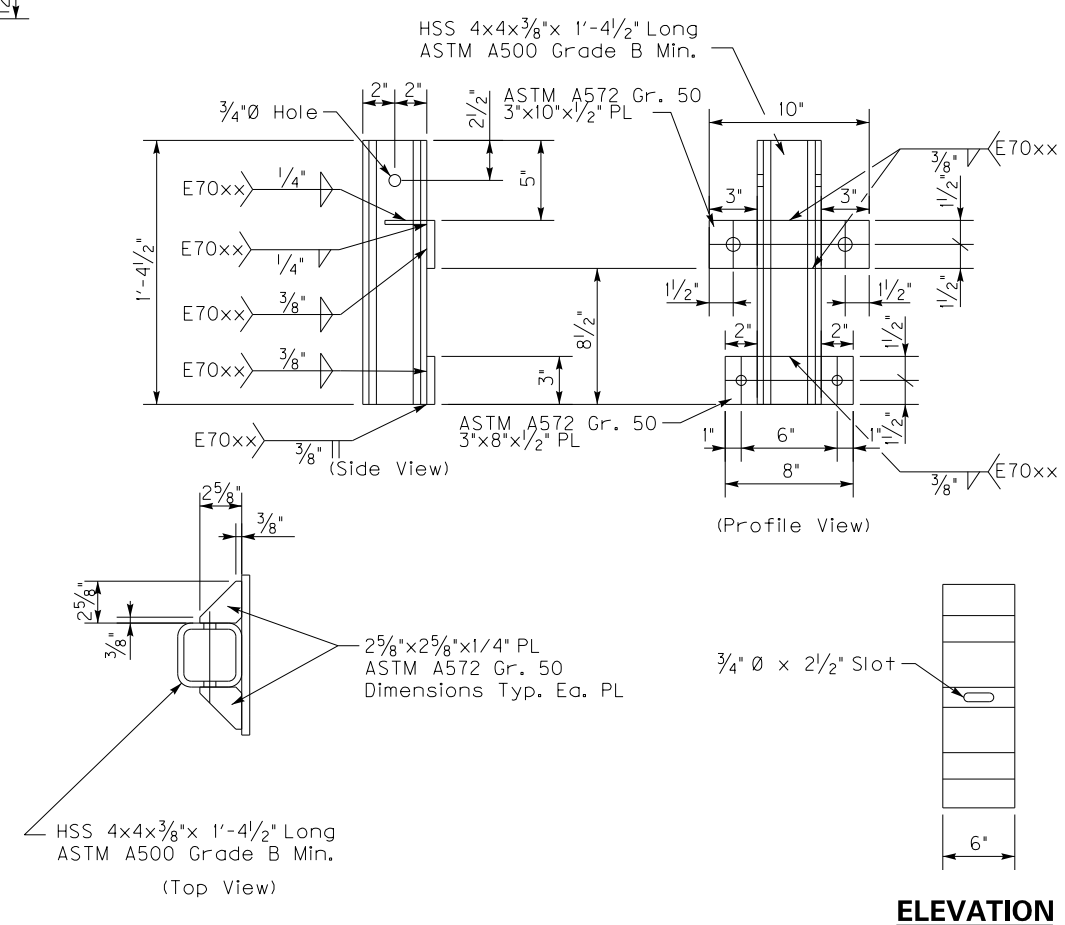

MOUNTING BRACKET

ELEVATION (Backer Plate)

SIDE VIEW (Backer Plate)

TRANSITION AND END TREATMENT NOTES:
This traffic railing must be anchored by a minimum of 25 feet of guardrail. This 25 feet at each corner of the bridge is to be paid with the roadway plans. See roadway plans for layout.

CONSTRUCTION NOTES:
Face of rail post must be plumb unless otherwise approved by the Engineer. Post must be perpendicular to adjacent roadway grade. Fully anchored guardrail must be attached to each end of rail. Typical guardrail construction as indicated above and not bridge rail transition or bridge end connector. It is recommended that the bridge plans show rail post locations. Round or chamfer exposed edges of rail posts and backer Plate to approximately 1/16" by grinding. Shop drawings are not required. Threaded rod may be cast in the beam/slab or may be drilled and epoxy grouted. Epoxy grout must conform to Section 826 and must have a minimum bond strength of 1,305 psi. Follow all manufacturers recommendations for installation.

MATERIAL NOTES:
All components must be supplied galvanized including fasteners, anchor rods, threaded rods, etc. Galvanize all steel components after fabrication in accordance with ASTM A123. W-beam must meet the requirements of Std. Dwg. RBR-001-12 except as modified in these plans. The contractor may furnish rail elements of 25'-0" or 12'-6" (Nominal) lengths. W-beam must have slotted holes at 3'-1½".

GENERAL NOTES:
This railing has been successfully evaluated by full scale crash test to meet MASH TL-3 criteria. This railing can be used for speeds 50 mph and greater.
This rail is designed to deflect approximately 4' - 4'-6" as it contains and redirects the errant vehicle. This rail may not be installed on top of or behind curbs that project above finished grade, on bridges with expansion joints providing more than 5" of movement, on retaining walls, or on grade separations and interchanges.
Repairs to impact-damaged post and mounting bracket unit are not permitted. Replace all impact-damaged posts with a new post. If mounting bracket is visibly damaged, replace the bracket with a new one as well.
Average weight of railing with no overlay: 19 plf total.

Note: Fabricator may elect to provide a ¾"Ø ASTM A563A heavy hex sleeve nut with a minimum length of 2¼" and minimum 1¼" across the flats along with threaded rod and the Anchor Rod. Maintain 12" minimum embedment with the ¾" Anchor Rod behind the sleeve nut. The fabricator may elect to provide a ½" ferrule insert for the bottom anchors with a minimum length of 2¾" and a safe working load of 2000 lbs in tension and shear along with the threaded rod. Alternatively, the bottom anchors may also be supplied with a ½"Ø ASTM A563A heavy hex sleeve nut with a minimum length of 1½" and a minimum of ⅞" across the flats. Maintain 4½" embedment behind the sleeve nut. All costs for sleeve nuts, threaded rods, anchor rods, etc. are incidental to the price bid for the Railing System Side Mounted MGS.

REVISION	DATE

DATE: APRIL 26, 2019	CHECKED BY
DESIGNED BY: R. Catron	C. Greenwell
DETAILED BY: S. Parsons	R. Catron

Commonwealth of Kentucky
DEPARTMENT OF HIGHWAYS

COUNTY: HOPKINS

ROUTE: KY 70 | CROSSING: SUGAR CREEK

RAILING – SIDE MOUNTED MGS

ITEM NUMBER	PREPARED BY	SHEET NO.
2–10005	Stantec	S5
	BRIDGING KENTUCKY	DRAWING NO. 27937

FILE NAME: ...\S05_Side Mounted MGS Railing.dgn
USER: srparsons
DATE PLOTTED: 4/5/2019 7:42:03 AM
E-SHEET NAME:
MicroStation v8.11.9.832

COUNTY OF	ITEM NO.	SHEET NO.
HOPKINS	2-10006	R1

TRANSPORTATION CABINET
DEPARTMENT OF HIGHWAYS

HOPKINS COUNTY
KY 70 - BEULAH RD. OVER CLEAR CREEK
STA. 268+93.50

STANDARD DRAWINGS

BDP-002-03	BOX BEAM BEARING DETAILS
BDP-003-03	BOX BEAM MISCELLANEOUS DETAILS
BGX-006-10	STENCILS FOR STRUCTURES
BJE-001-13	NEOPRENE EXPANSION DAM AND ARMORED EDGES
BPS-003-09	HP12X53 STEEL PILE
RBI-002-07	TYPICAL GUARDRAIL INSTALLATION
RBR-005-11	GUARDRAIL COMPONENTS
RDI-040-01	EROSION CONTROL BLANKET SLOPE INSTALLATION
RDX-210-03	TEMPORARY SILT FENCE
RDX-220-05	SILT TRAP A
RDX-225-01	SILT TRAP B
RGX-001-06	MISCELLANEOUS STANDARDS
RGX-200-01	ONE POINT PROCTOR FAMILY OF CURVES

ACTIVE SEPIAS

SEPIA 009	TREATMENT OF EMBANKMENTS AT END-BENTS
SEPIA 010	TREATMENT OF EMBANKMENTS AT END-BENTS - DETAILS
SEPIA 024	TYPICAL GUARDRAIL INSTALLATIONS
SEPIA 027	STEEL BEAM GUARDRAIL ("W" BEAM)
SEPIA 028	STEEL GUARDRAIL POSTS
SEPIA 029	GUARDRAIL END TREATMENT TYPE 1
SEPIA 032	DELINEATORS FOR GUARDRAIL
SEPIA 047	BOX BEAM GENERAL NOTES & REFERENCES
SEPIA 048	BOX BEAM TENSION ROD DETAILS
SEPIA 050	BOX BEAM B17 AND CB17 DETAILS

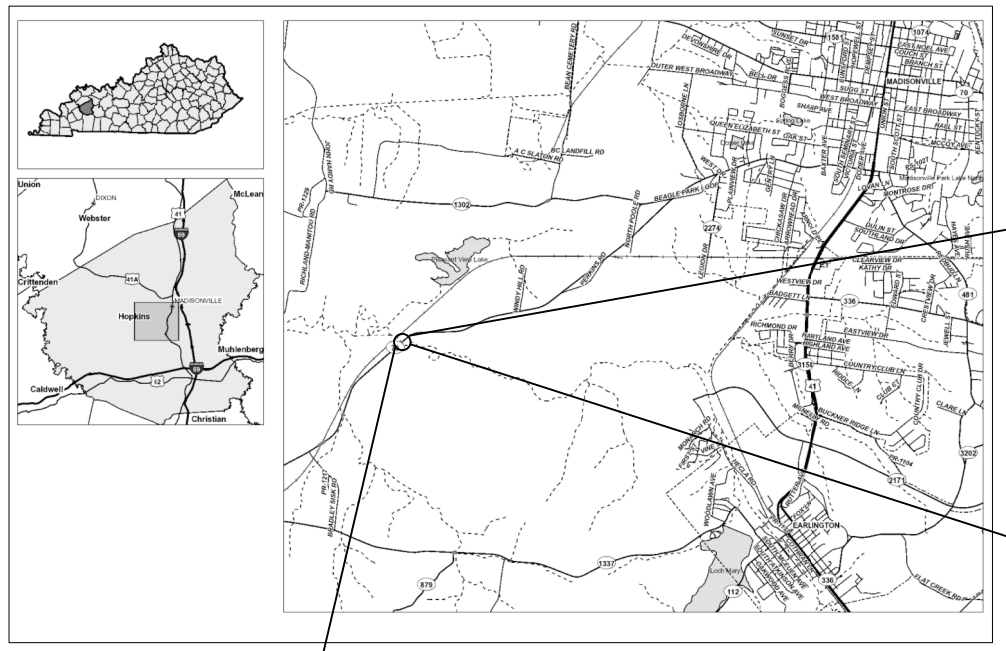

LOCATION MAP

INDEX OF SHEETS

Sheet No.	Description
R1	TITLE SHEET
R2	TYPICAL SHEET
R3	PLAN SHEET
R4	PROFILE SHEET
S1	GENERAL NOTES
S2	LAYOUT SHEET
S3	PILE RECORD
S4	END BENTS
S5	PIERS
S6	RAILING - SIDE MOUNTED MGS

SPECIAL NOTES

CONTRACT COMPLETION DATE AND LIQUIDATED DAMAGES
TRAFFIC CONTROL ON BRIDGE REPAIR CONTRACTS
PLACING BRIDGE OVERLAY APPROACH PAVEMENT
PORTABLE CHANGEABLE MESSAGE SIGNS
EROSION PREVENTION AND SEDIMENT CONTROL
STRUCTURES WITH OVER THE SIDE DRAINAGE
CONCRETE COATING

SPECIAL PROVISIONS

69 EMBANKMENT AT BRIDGE END BENT STRUCTURES

SPECIFICATIONS

2012 Standard Specifications for Road and Bridge Construction.

2017 AASHTO LRFD Bridge Design Specifications with Current Interims.

DESIGN CRITERIA

CLASS OF HIGHWAY: MAJOR COLLECTOR
TYPE OF TERRAIN:
DESIGN SPEED:
REQUIRED NPSD:
REQUIRED PSD:
LEVEL OF SERVICE:
ADT PRESENT (2016): 2,327
ADT FUTURE ( ):
DHV:
D %:
T %:

GEOGRAPHIC COORDINATES

LATITUDE 37 DEGREES 17 MINUTES 46 SECONDS NORTH
LONGITUDE 87 DEGREES 34 MINUTES 17 SECONDS WEST

DESIGNED

% RESTRICTED SD:
LEVEL OF SERVICE:
MAX. DISTANCE W/O PASSING:

BEFORE YOU DIG

The contractor is instructed to call 1-800-752-6007 to reach KY 811, the one-call system for information on the location of existing underground utilities. The call is to be placed a minimum of two (2) and no more than ten (10) business days prior to excavation. The contractor should be aware that owners of underground facilities are not required to be members of the KY 811 one-call Before-U-Dig (BUD) service. The contractor must coordinate excavation with the utility owners, including those whom do not subscribe to KY 811. It may be necessary for the contractor to contact the County Court Clerk to determine what utility companies have facilities in the area.

Existing Bridge ID # 054B00182N

STATE OF KENTUCKY
CHRISTOPHER D. PADGETT
27991
LICENSED
PROFESSIONAL ENGINEER

STATE OF KENTUCKY
ROBERT V. CATRON
32481
LICENSED
PROFESSIONAL ENGINEER

REV. NO.	SHEETS REVISED	DATE
1	R1, R2, R3, S2 & S6 (ADDED)	04/08/19

TABLE OF REVISIONS

PREPARED BY Stantec

BRIDGING KENTUCKY — Restore | Renew | Replace

REVISION	DATE

Commonwealth of Kentucky
DEPARTMENT OF HIGHWAYS
COUNTY OF
HOPKINS

ITEM NO. 2-10006
DRAWING NO. 27938
PROJECT NUMBER:
LETTING DATE: APRIL 26, 2019

RECOMMENDED BY: _____ PROJECT MANAGER DATE:

PLAN APPROVED BY: _____ STATE HIGHWAY ENGINEER DATE:

FILE NAME: $DGNSPEC$
USER: $USER$ DATE PLOTTED: $DATE$ $TIME$
E-SHEET NAME:
MicroStation v8.11.9.459

COUNTY OF	ITEM NO.	SHEET NO.
HOPKINS	2-10006	R1

TRANSPORTATION CABINET
DEPARTMENT OF HIGHWAYS

HOPKINS COUNTY
KY 70 - BEULAH RD. OVER CLEAR CREEK
STA. 268+93.50

STANDARD DRAWINGS

BDP-002-03	BOX BEAM BEARING DETAILS
BDP-003-03	BOX BEAM MISCELLANEOUS DETAILS
BGX-006-10	STENCILS FOR STRUCTURES
BJE-001-13	NEOPRENE EXPANSION DAM AND ARMORED EDGES
BPS-003-09	HP12X53 STEEL PILE
RBI-002-07	TYPICAL GUARDRAIL INSTALLATION
RBR-005-11	GUARDRAIL COMPONENTS
RDI-040-01	EROSION CONTROL BLANKET SLOPE INSTALLATION
RDX-210-03	TEMPORARY SILT FENCE
RDX-220-05	SILT TRAP A
RDX-225-01	SILT TRAP B
RGX-001-06	MISCELLANEOUS STANDARDS
RGX-200-01	ONE POINT PROCTOR FAMILY OF CURVES

ACTIVE SEPIAS

SEPIA 009	TREATMENT OF EMBANKMENTS AT END-BENTS
SEPIA 010	TREATMENT OF EMBANKMENTS AT END-BENTS - DETAILS
SEPIA 024	TYPICAL GUARDRAIL INSTALLATIONS
SEPIA 027	STEEL BEAM GUARDRAIL ("W" BEAM)
SEPIA 028	STEEL GUARDRAIL POSTS
SEPIA 029	GUARDRAIL END TREATMENT TYPE 1
SEPIA 032	DELINEATORS FOR GUARDRAIL
SEPIA 047	BOX BEAM GENERAL NOTES & REFERENCES
SEPIA 048	BOX BEAM TENSION ROD DETAILS
SEPIA 050	BOX BEAM B17 AND CB17 DETAILS

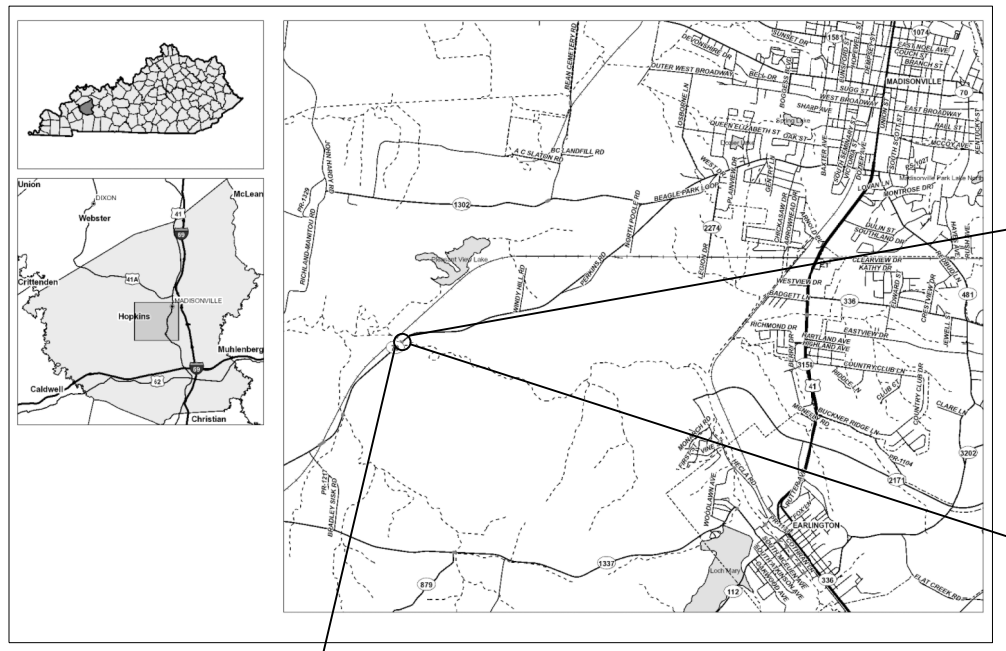

LOCATION MAP

INDEX OF SHEETS

Sheet No.	Description
R1	TITLE SHEET
R2	TYPICAL SHEET
R3	PLAN SHEET
R4	PROFILE SHEET
S1	GENERAL NOTES
S2	LAYOUT SHEET
S3	PILE RECORD
S4	END BENTS
S5	PIERS
S6	RAILING - SIDE MOUNTED MGS

SPECIAL NOTES

CONTRACT COMPLETION DATE AND LIQUIDATED DAMAGES
TRAFFIC CONTROL ON BRIDGE REPAIR CONTRACTS
PLACING BRIDGE OVERLAY APPROACH PAVEMENT
PORTABLE CHANGEABLE MESSAGE SIGNS
EROSION PREVENTION AND SEDIMENT CONTROL
STRUCTURES WITH OVER THE SIDE DRAINAGE
CONCRETE COATING

SPECIAL PROVISIONS

69 EMBANKMENT AT BRIDGE END BENT STRUCTURES

SPECIFICATIONS

2012 Standard Specifications for Road and Bridge Construction.

2017 AASHTO LRFD Bridge Design Specifications with Current Interims.

DESIGN CRITERIA

CLASS OF HIGHWAY: MAJOR COLLECTOR
TYPE OF TERRAIN:
DESIGN SPEED:
REQUIRED NPSD:
REQUIRED PSD:
LEVEL OF SERVICE:
ADT PRESENT (2016): 2,327
ADT FUTURE ( ):
DHV:
D %:
T %:

GEOGRAPHIC COORDINATES

LATITUDE 37 DEGREES 17 MINUTES 46 SECONDS NORTH
LONGITUDE 87 DEGREES 34 MINUTES 17 SECONDS WEST

DESIGNED

% RESTRICTED SD:
LEVEL OF SERVICE:
MAX. DISTANCE W/O PASSING:

BEFORE YOU DIG

The contractor is instructed to call 1-800-752-6007 to reach KY 811, the one-call system for information on the location of existing underground utilities. The call is to be placed a minimum of two (2) and no more than ten (10) business days prior to excavation. The contractor should be aware that owners of underground facilities are not required to be members of the KY 811 one-call Before-U-Dig (BUD) service. The contractor must coordinate excavation with the utility owners, including those whom do not subscribe to KY 811. It may be necessary for the contractor to contact the County Court Clerk to determine what utility companies have facilities in the area.

Existing Bridge ID # 054B00182N

STATE OF KENTUCKY
CHRISTOPHER D. PADGETT
27991
LICENSED
PROFESSIONAL ENGINEER

STATE OF KENTUCKY
ROBERT V. CATRON
32481
LICENSED
PROFESSIONAL ENGINEER

REV. NO.	SHEETS REVISED	DATE
1	R1, R2, R3, S2 & S6 (ADDED)	04/08/19

TABLE OF REVISIONS

PREPARED BY Stantec

BRIDGING KENTUCKY — Restore | Renew | Replace

REVISION	DATE

Commonwealth of Kentucky
DEPARTMENT OF HIGHWAYS
COUNTY OF
HOPKINS

ITEM NO. 2-10006
DRAWING NO. 27938
PROJECT NUMBER:
LETTING DATE: APRIL 26, 2019

RECOMMENDED BY: PROJECT MANAGER DATE:
PLAN APPROVED BY: STATE HIGHWAY ENGINEER DATE:

FILE NAME: $DGNSPEC$
USER: $USER$ DATE PLOTTED: $DATE$ $TIME$
E-SHEET NAME:
MicroStation v8.11.9.459

COUNTY OF	ITEM NO.	SHEET NO.
HOPKINS	2-10006	R2

CONVENTIONAL SIGNS

SURVEY LINE
GRADE LINE — 400' V.C.
GROUND LINE
COUNTY LINE
CORPORATE LIMITS
EXIST. PROPERTY LINE
EXIST. RIGHT OF WAY & PROPERTY LINE
PROPOSED RIGHT OF WAY
RIGHT OF WAY MONUMENT
BENCH MARK — B.M. NO.4
EXISTING R/W MARKER
RIGHT OF WAY MONUMENT EXISTING/PROPOSED
UTILITY TEST HOLE — TH
EXISTING ROAD
RAILROAD
FENCE (CONTROLLED ACCESS)
FENCE (EXCEPT STONE AND HEDGE)
TREE LINE
TREES
PIPE CULVERT
CULVERT
BRIDGE
BUILDINGS — 1-S FRAME, 1-S BRICK, SHED, 2-S BRICK
GUARDRAIL — END TREATMENT, GUARDRAIL, TERMINAL SECTION

	EXISTING	PROPOSED
LIGHTING POLE		
POWER POLE		
JOINT POWER & TELEPHONE POLE		
TELEPHONE & TELEGRAPH POLE		
ANCHOR, POWER OR TELEPHONE		
STUB POWER		
STUB TELEPHONE		
WATER MAIN	WM	6" WM
GAS MAIN	GM	6" GM
TELEPHONE DUCT	T	T
ELECTRIC DUCT	E	E
DIRECT BURIAL TV CABLE	TV	TV
SANITARY SEWER (WITH MANHOLE)	SAN	SAN
STORM SEWER (WITH MANHOLE)	STORM	STORM
DIRECT BURIAL ELECTRIC CABLE	E	E
DIRECT BURIAL TELEPHONE CABLE	T	T
OVERHEAD WIRE		
TRAFFIC LIGHTS		
ELECTRIC MANHOLE	EMH	EMH
TELEPHONE MANHOLE	TMH	TMH

STONE FENCE
HEDGE FENCE
SWAMP OR MARSH
SPRINGS
SINKHOLE
QUARRY SITE
BLUE LINE STREAM
INTERMITTENT STREAM OR DITCH
LAKES OR PONDS
REGULATED FLOODWAY
NORTH POINT

NOTES:

1. Material needed for shoulders outside of paved area will be measured and paid as GRANULAR EMBANKMENT in accordance with the Special Note for Bridge Overlay Approach Pavement
2. Varies 0' to 2'-0"

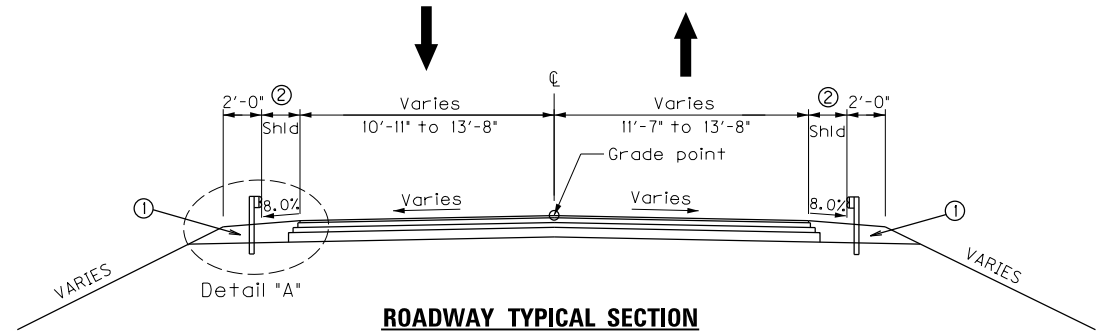

ROADWAY TYPICAL SECTION

KY 70 PAVEMENT

16.00" Base
- 8.00" DGA Base
- 4.00" CL2 Asph Base 1.00D PG64-22
- 4.00" CL2 Asph Base 1.00D PG64-22

1.25" Surface
- 1.25" CL2 Asph Surf 0.38D PG64-22

SHOULDERS

Granular Embankment

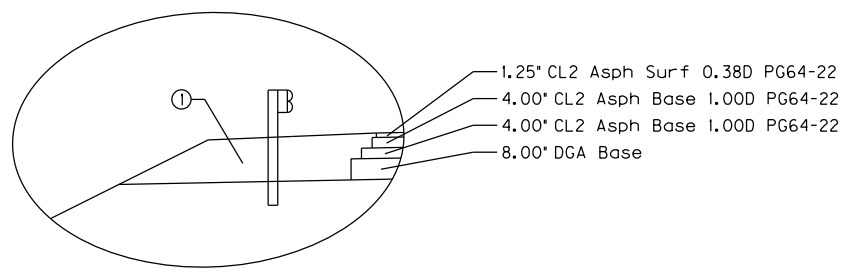

Detail "A"

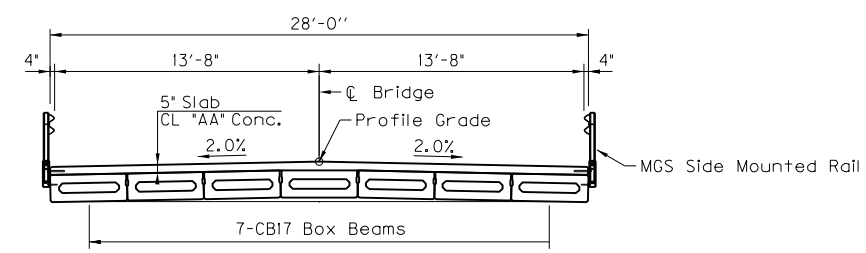

BRIDGE TYPICAL SECTION

NOT TO SCALE

PREPARED BY

BRIDGING KENTUCKY — Restore | Renew | Replace

TYPICAL SECTIONS & LEGEND
KY 70 - BEULAH RD.
OVER CLEAR CREEK

FILE NAME: $DGNSPEC$
USER: $USER$ DATE PLOTTED: $DATE$ $TIME$
E-SHEET NAME:
MicroStation v8.11.9.459

COUNTY OF	ITEM NO.	SHEET NO.
HOPKINS	2-10006	R2

CONVENTIONAL SIGNS

SURVEY LINE
GRADE LINE — 400' V.C.
GROUND LINE
COUNTY LINE
CORPORATE LIMITS
EXIST. PROPERTY LINE
EXIST. RIGHT OF WAY & PROPERTY LINE
PROPOSED RIGHT OF WAY
RIGHT OF WAY MONUMENT
BENCH MARK — B.M. NO.4
EXISTING R/W MARKER
RIGHT OF WAY MONUMENT EXISTING/PROPOSED
UTILITY TEST HOLE — TH
EXISTING ROAD
RAILROAD
FENCE (CONTROLLED ACCESS)
FENCE (EXCEPT STONE AND HEDGE)
TREE LINE
TREES
PIPE CULVERT
CULVERT
BRIDGE
BUILDINGS — 1-S FRAME, 1-S BRICK, SHED, 2-S BRICK
GUARDRAIL — END TREATMENT, GUARDRAIL, TERMINAL SECTION

	EXISTING	PROPOSED
LIGHTING POLE		
POWER POLE		
JOINT POWER & TELEPHONE POLE		
TELEPHONE & TELEGRAPH POLE		
ANCHOR, POWER OR TELEPHONE		
STUB POWER		
STUB TELEPHONE		
WATER MAIN	WM	6" WM
GAS MAIN	GM	6" GM
TELEPHONE DUCT	T	T
ELECTRIC DUCT	E	E
DIRECT BURIAL TV CABLE	TV	TV
SANITARY SEWER (WITH MANHOLE)	SAN	SAN
STORM SEWER (WITH MANHOLE)	STORM	STORM
DIRECT BURIAL ELECTRIC CABLE	E	E
DIRECT BURIAL TELEPHONE CABLE	T	T
OVERHEAD WIRE		
TRAFFIC LIGHTS		
ELECTRIC MANHOLE	EMH	EMH
TELEPHONE MANHOLE	TMH	TMH

STONE FENCE
HEDGE FENCE
SWAMP OR MARSH
SPRINGS
SINKHOLE
QUARRY SITE
BLUE LINE STREAM
INTERMITTENT STREAM OR DITCH
LAKES OR PONDS
REGULATED FLOODWAY
NORTH POINT

NOTES:

1. Material needed for shoulders outside of paved area will be measured and paid as GRANULAR EMBANKMENT in accordance with the Special Note for Bridge Overlay Approach Pavement
2. Varies 0' to 2'-0"

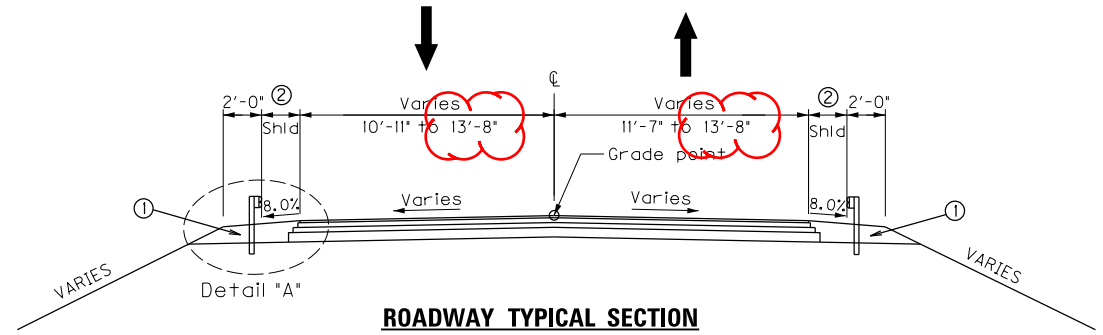

ROADWAY TYPICAL SECTION

KY 70 PAVEMENT

16.00" Base
- 8.00" DGA Base
- 4.00" CL2 Asph Base 1.00D PG64-22
- 4.00" CL2 Asph Base 1.00D PG64-22

1.25" Surface
- 1.25" CL2 Asph Surf 0.38D PG64-22

SHOULDERS

Granular Embankment

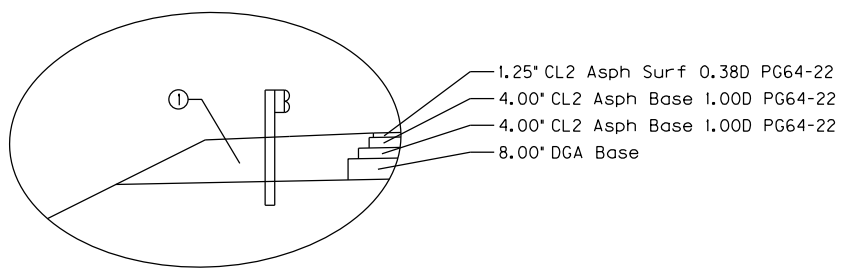

Detail "A"

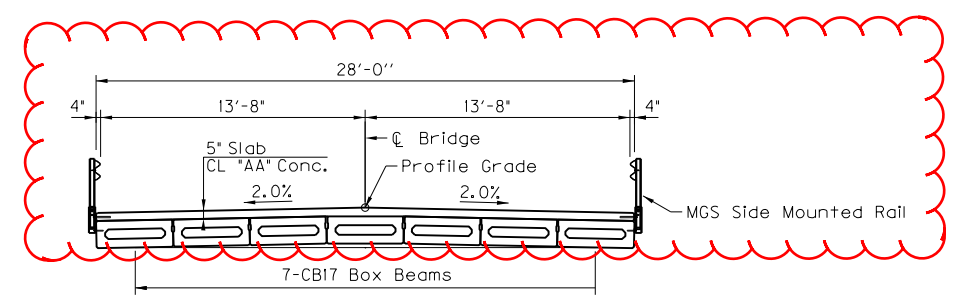

BRIDGE TYPICAL SECTION

NOT TO SCALE

PREPARED BY

BRIDGING KENTUCKY — Restore | Renew | Replace

TYPICAL SECTIONS & LEGEND
KY 70 - BEULAH RD.
OVER CLEAR CREEK

FILE NAME: $DGNSPEC$
USER: $USER$ DATE PLOTTED: $DATE$ $TIME$
E-SHEET NAME:
MicroStation v8.11.9.459

COUNTY OF	ITEM NO.	SHEET NO.
HOPKINS	2-10006	R3

Existing Bridge ID # 054B00182N

Project Coordinates:
Coordinates for horizontal control were obtained by redundant GPS observations using Champion PRO GNSS receivers. On the NAD83 Kentucky State Plane Coordinate System, KY Single Zone, US Survey Feet utilizing the KYCORS RTN GPS Network on October 24', 2018. Coordinates shown are State Plane Coordinates, US Survey Feet. No project datum factor was calculated or used for this project.

Basis of Elevations:
Elevations were established by redundant GPS observations NAVD88 vertical datum, Geoid 12B utilizing the KYCORS RTN Network and were adjusted by closed differential level loop based on the elevation of CP#1 (Elev.:398.09')

STA. 268+93.5 REMOVE EXIST. 5-SPAN PRESTRESSED CONCRETE BOX BEAM BRIDGE, ABUTMENTS AND PIERS

LT. STA. 269+62.5 TO STA. 270+37.5 CONST.
25 L.F. GUARDRAIL-STEEL W BEAM-S FACE
WITH 1-GUARDRAIL END TREATMENT TYPE 1
CONNECT TO BRIDGE RAIL SYSTEM MGS

LT. STA. 267+49.5 TO STA. 268+24.5 CONST.
25 L.F. GUARDRAIL-STEEL W BEAM-S FACE
WITH 1-GUARDRAIL END TREATMENT TYPE 1
CONNECT TO BRIDGE RAIL SYSTEM MGS

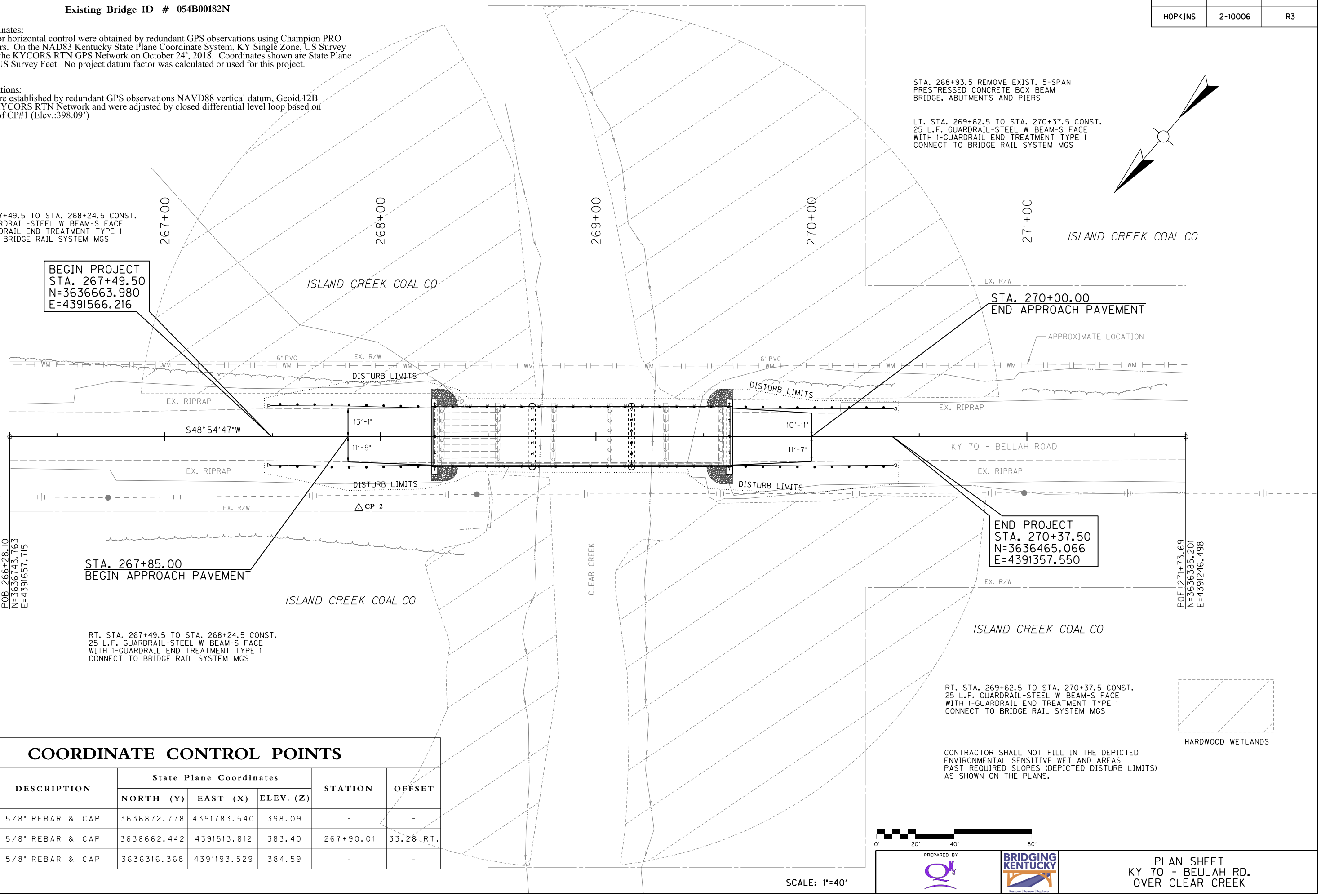

CONTRACTOR SHALL NOT FILL IN THE DEPICTED ENVIRONMENTAL SENSITIVE WETLAND AREAS PAST REQUIRED SLOPES (DEPICTED DISTURB LIMITS) AS SHOWN ON THE PLANS.

COORDINATE CONTROL POINTS

POINT	DESCRIPTION	State Plane Coordinates			STATION	OFFSET
		NORTH (Y)	EAST (X)	ELEV. (Z)		
CP 1	5/8" REBAR & CAP	3636872.778	4391783.540	398.09	-	-
CP 2	5/8" REBAR & CAP	3636662.442	4391513.812	383.40	267+90.01	33.28 RT.
CP 3	5/8" REBAR & CAP	3636316.368	4391193.529	384.59	-	-

SCALE: 1"=40'

PREPARED BY

BRIDGING KENTUCKY
Restore | Renew | Replace

PLAN SHEET
KY 70 - BEULAH RD.
OVER CLEAR CREEK

FILE NAME: $DGNSPEC$
USER: $USER$
DATE PLOTTED: $DATE$ $TIME$
E-SHEET NAME:
MicroStation v8.11.9.459

COUNTY OF	ITEM NO.	SHEET NO.
HOPKINS	2-10006	R3

Existing Bridge ID # 054B00182N

Project Coordinates:
Coordinates for horizontal control were obtained by redundant GPS observations using Champion PRO GNSS receivers. On the NAD83 Kentucky State Plane Coordinate System, KY Single Zone, US Survey Feet utilizing the KYCORS RTN GPS Network on October 24', 2018. Coordinates shown are State Plane Coordinates, US Survey Feet. No project datum factor was calculated or used for this project.

Basis of Elevations:
Elevations were established by redundant GPS observations NAVD88 vertical datum, Geoid 12B utilizing the KYCORS RTN Network and were adjusted by closed differential level loop based on the elevation of CP#1 (Elev.:398.09')

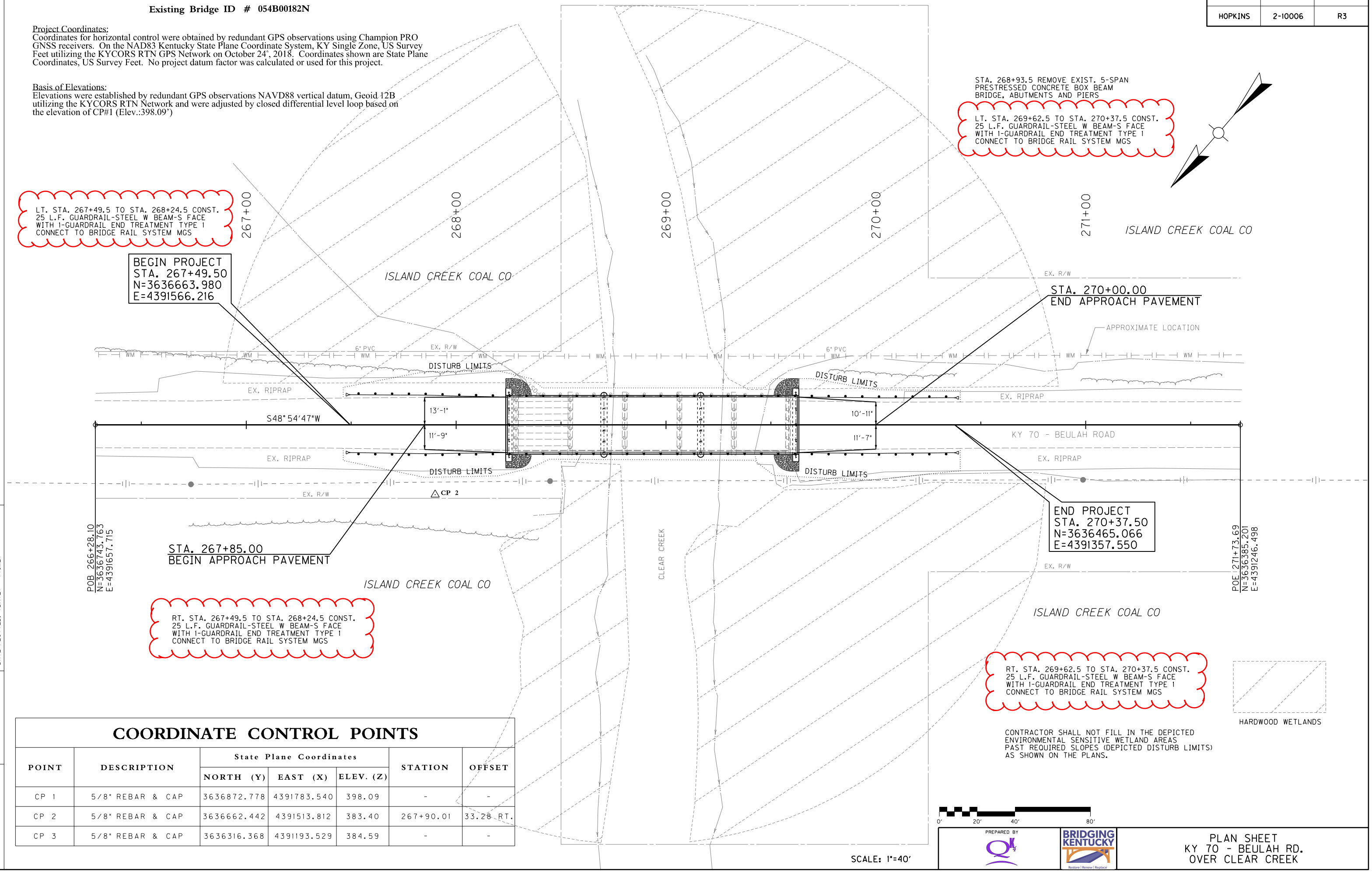

COORDINATE CONTROL POINTS

POINT	DESCRIPTION	State Plane Coordinates			STATION	OFFSET
		NORTH (Y)	EAST (X)	ELEV. (Z)		
CP 1	5/8" REBAR & CAP	3636872.778	4391783.540	398.09	-	-
CP 2	5/8" REBAR & CAP	3636662.442	4391513.812	383.40	267+90.01	33.28 RT.
CP 3	5/8" REBAR & CAP	3636316.368	4391193.529	384.59	-	-

FILE NAME: $DGNSPEC$
USER: $USER$
DATE PLOTTED: $DATE$ $TIME$
E-SHEET NAME:
MicroStation v8.11.9.459

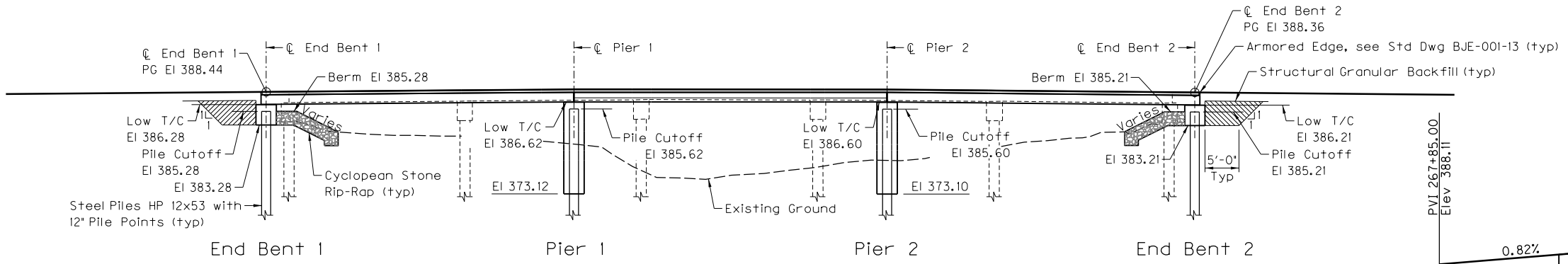

PROFILE

3 Spans: 45'-3 1/2" ~ 46'-1" ~ 45'-3 1/2"
CB17x48 Box Beams ~ HL-93 (+25%) Live Load
0° Skew ~ 27'-4" Bridge Roadway Width

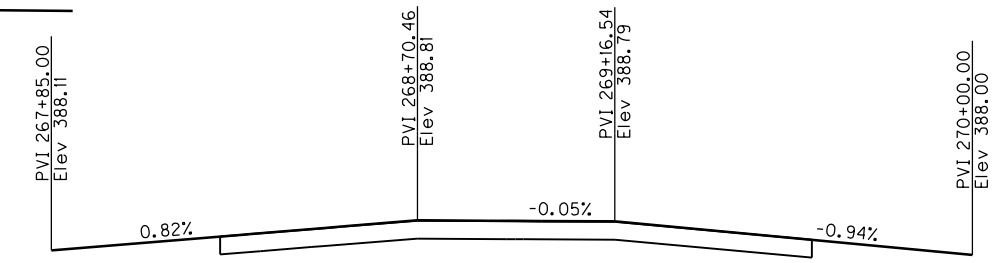

PROFILE GRADE

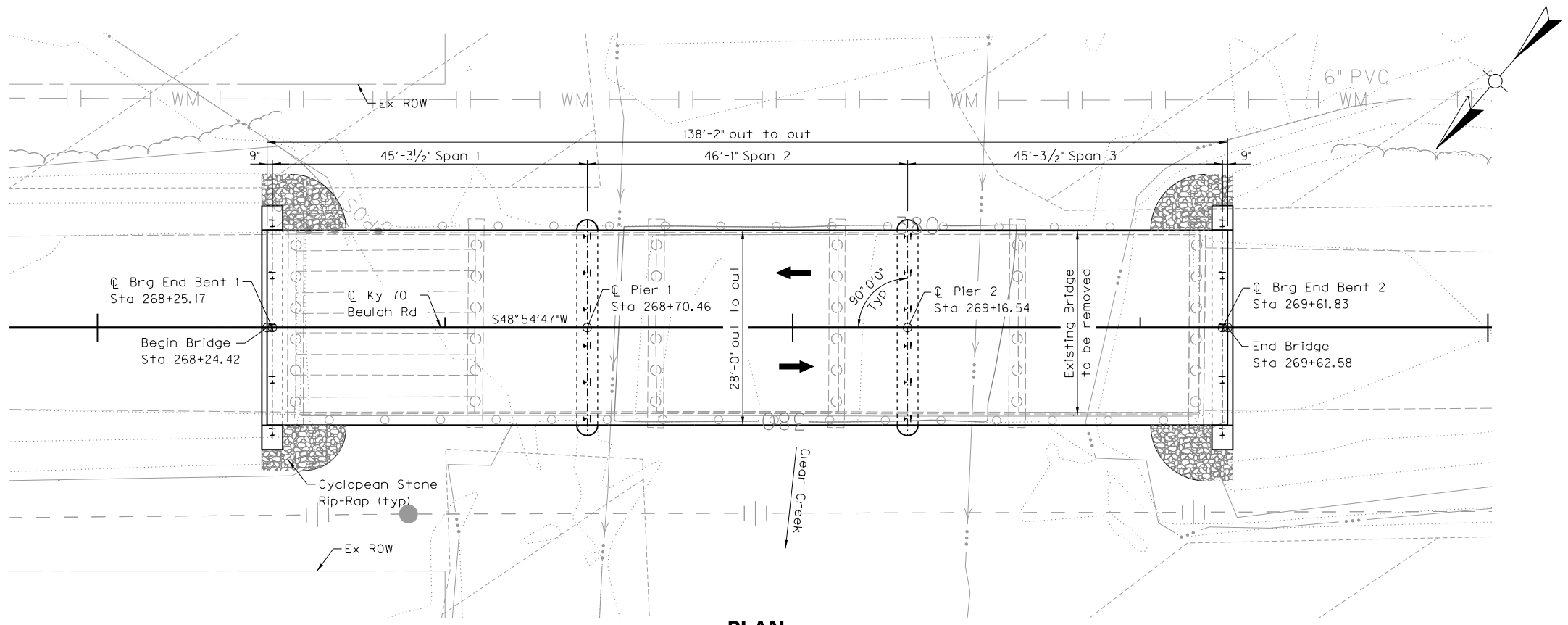

PLAN

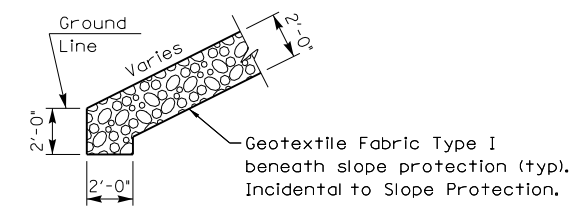

Toe of Slope
Detail

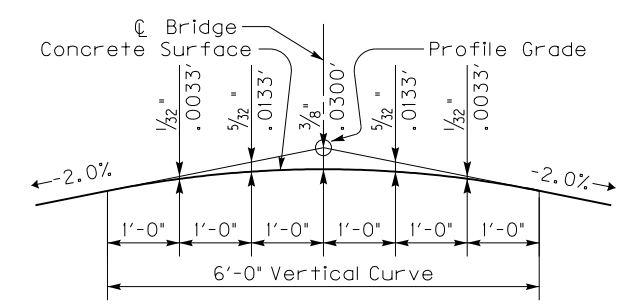

PARABOLIC CROWN

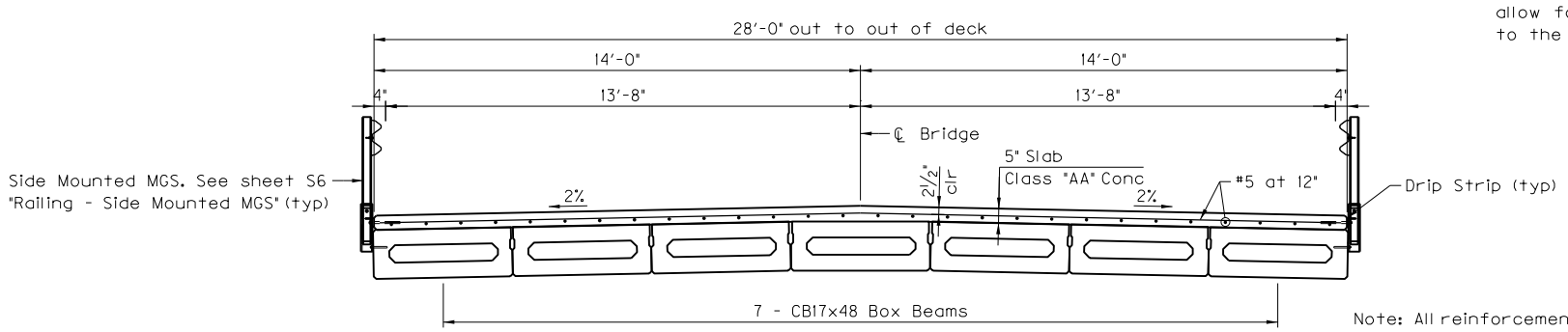

TYPICAL SECTION

Note: All reinforcement shall be epoxy coated.

12" wide Mastic Tape to waterproof the joint between abutment and slab. The tape shall be looped as shown to allow for movement without damage to the tape. See the General Notes.

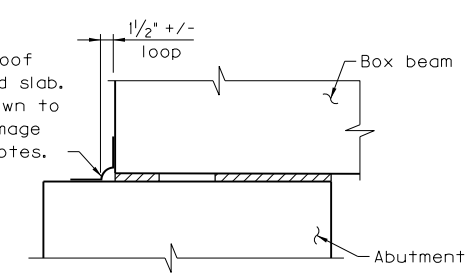

JOINT WATERPROOFING DETAIL

REVISION	DATE

DATE: April 26, 2019	CHECKED BY
DESIGNED BY: R. Catron	C. Greenwell
DETAILED BY: A. Grace	R. Catron

Commonwealth of Kentucky
DEPARTMENT OF HIGHWAYS

COUNTY: HOPKINS

ROUTE: KY 70

CROSSING: CLEAR CREEK

LAYOUT

ITEM NUMBER: 2–10006

PREPARED BY: Stantec

BRIDGING KENTUCKY — Restore | Renew | Replace

SHEET NO. S2

DRAWING NO. 27938

FILE NAME: ...\Structures\Drawing\S2_Layout
USER: srparsons
DATE PLOTTED: 4/5/2019 7:50:55 AM
E-SHEET NAME:
MicroStation v8.11.9.832

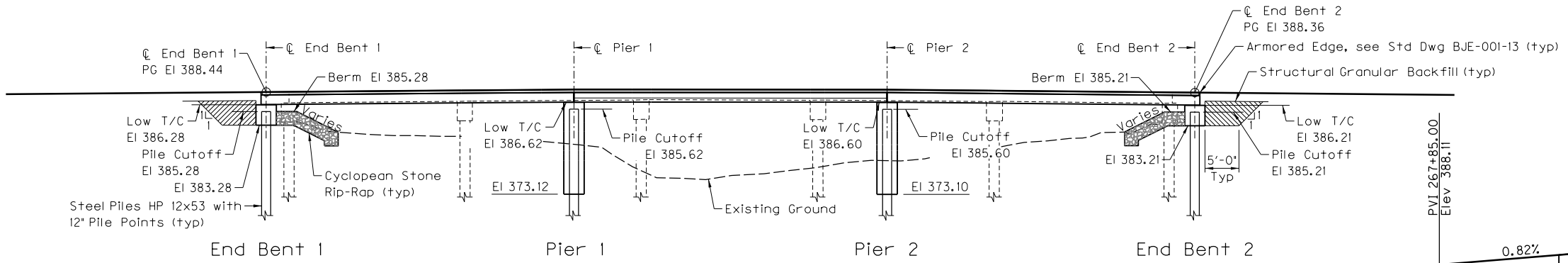

PROFILE

3 Spans: 45'-3 1/2" ~ 46'-1" ~ 45'-3 1/2"
CB17x48 Box Beams ~ HL-93 (+25%) Live Load
0° Skew ~ 27'-4" Bridge Roadway Width

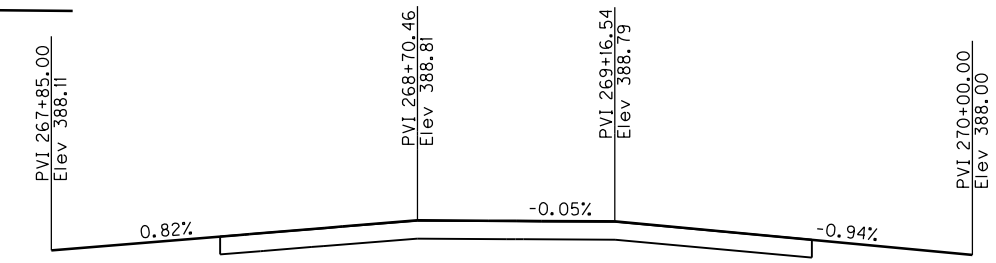

PROFILE GRADE

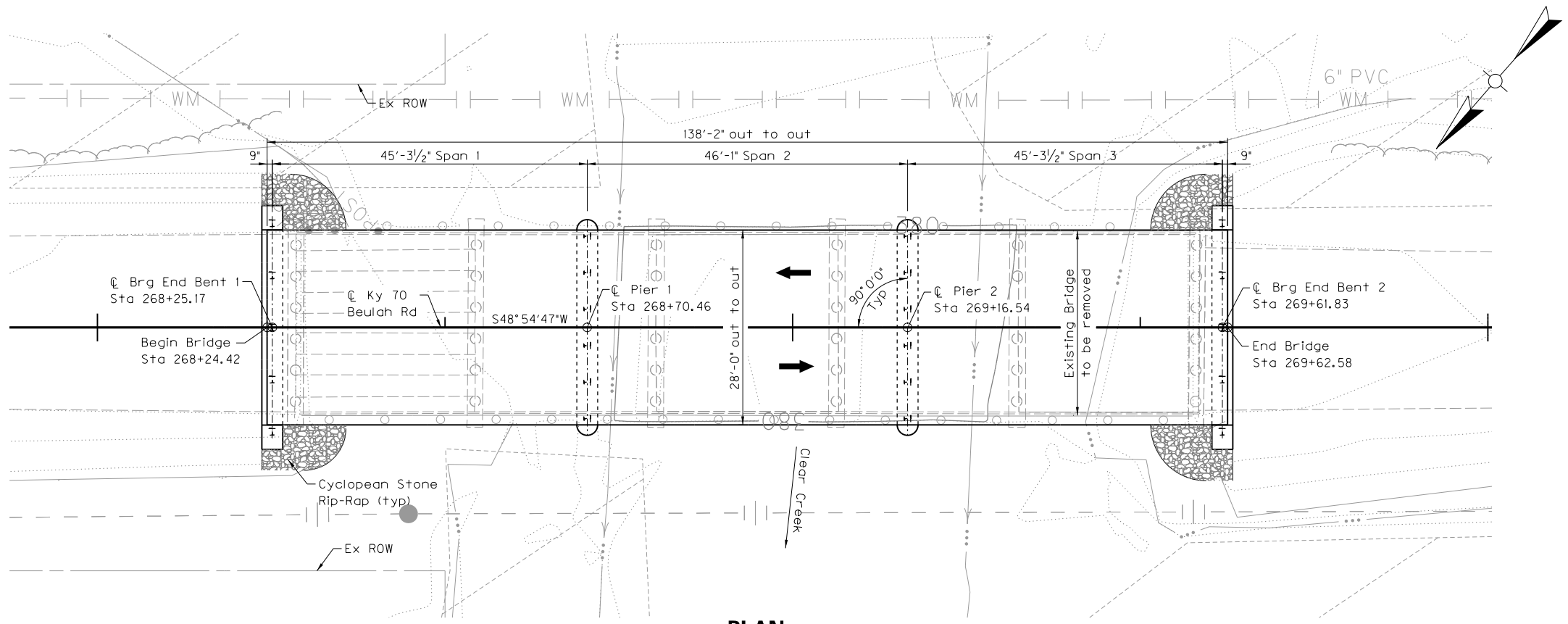

PLAN

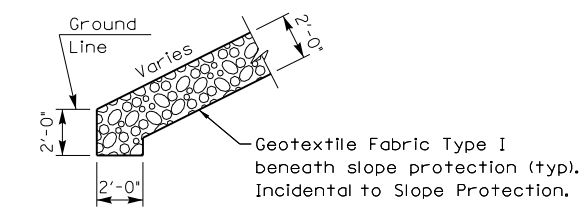

Toe of Slope
Detail

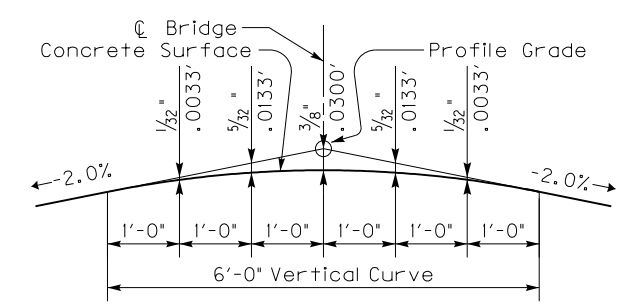

PARABOLIC CROWN

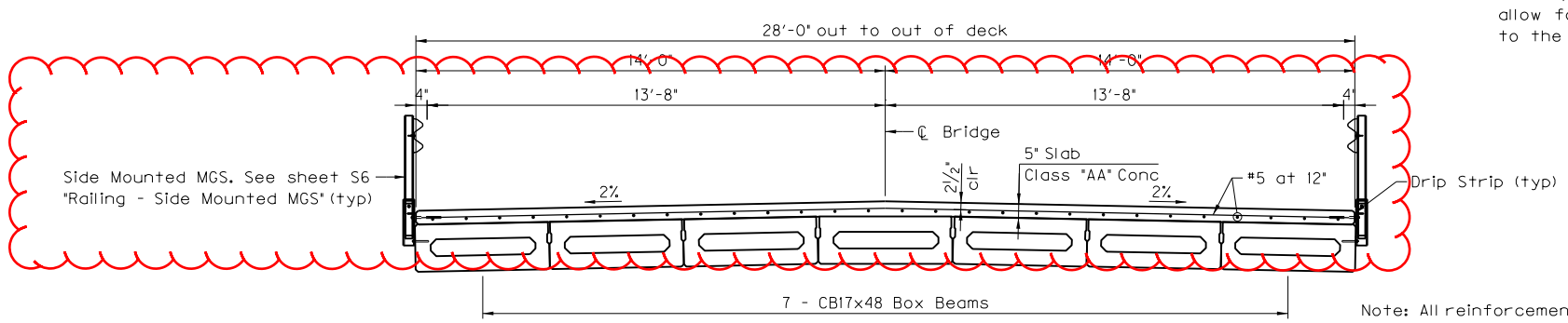

TYPICAL SECTION

Note: All reinforcement shall be epoxy coated.

12" wide Mastic Tape to waterproof the joint between abutment and slab. The tape shall be looped as shown to allow for movement without damage to the tape. See the General Notes.

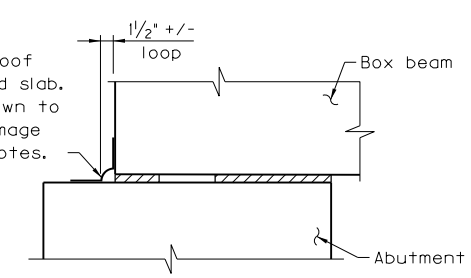

JOINT WATERPROOFING DETAIL

REVISION	DATE

DATE: April 26, 2019	CHECKED BY
DESIGNED BY: R. Catron	C. Greenwell
DETAILED BY: A. Grace	R. Catron

Commonwealth of Kentucky
DEPARTMENT OF HIGHWAYS

COUNTY: HOPKINS

ROUTE: KY 70

CROSSING: CLEAR CREEK

LAYOUT

ITEM NUMBER: 2–10006

PREPARED BY: Stantec

BRIDGING KENTUCKY — Restore | Renew | Replace

SHEET NO. S2

DRAWING NO. 27938

MicroStation v8.11.9.832 E-SHEET NAME: USER: srparsons DATE PLOTTED: 4/5/2019 7:50:55 AM FILE NAME: ...\Structures\Drawing\S2_Layout

Contrary to Standard Drawings for Guardrail, place splices between posts off of bridge as shown.

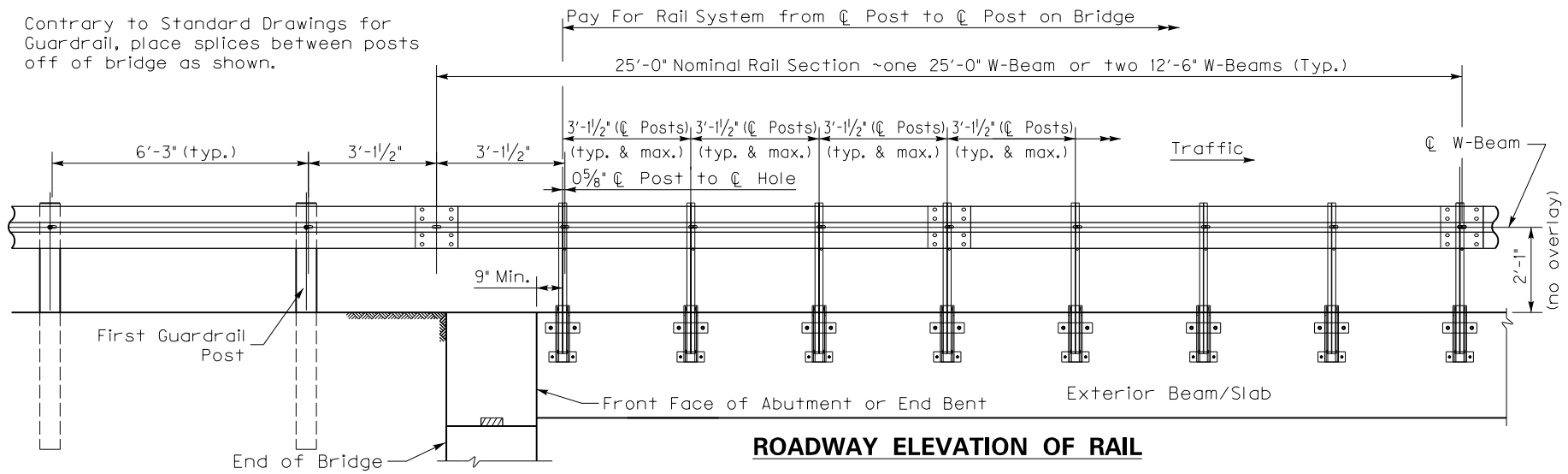

ROADWAY ELEVATION OF RAIL

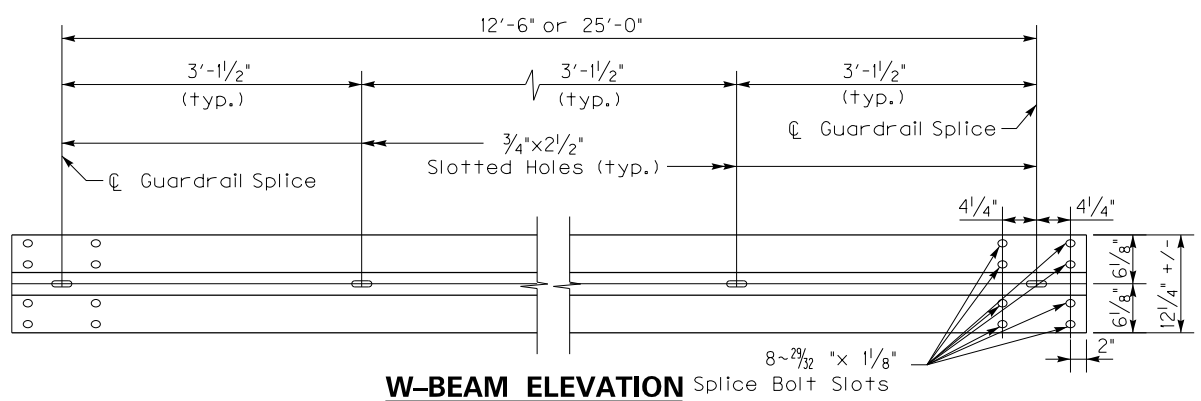

W-BEAM ELEVATION

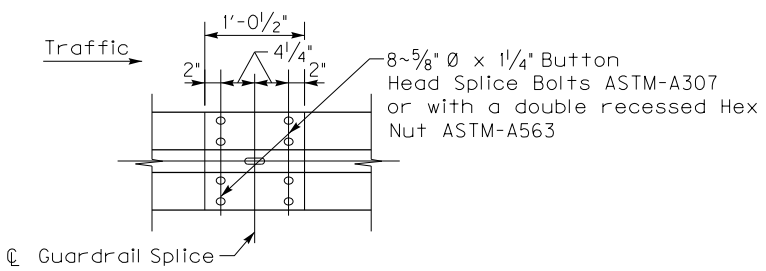

W-BEAM SPLICE ELEVATION

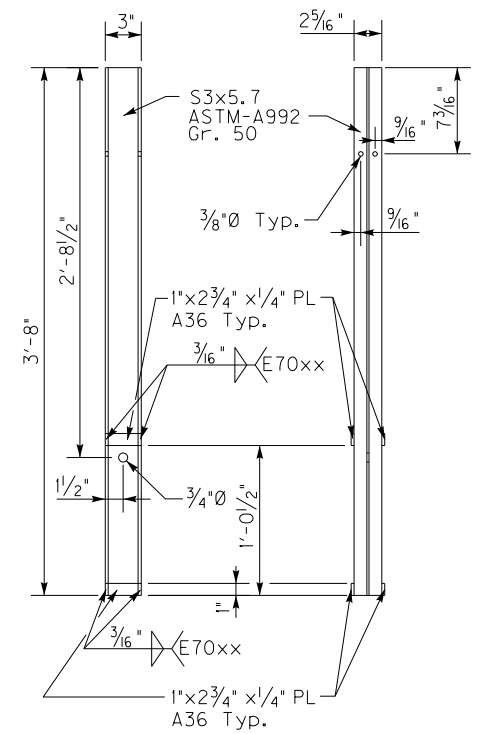

POST ELEVATION

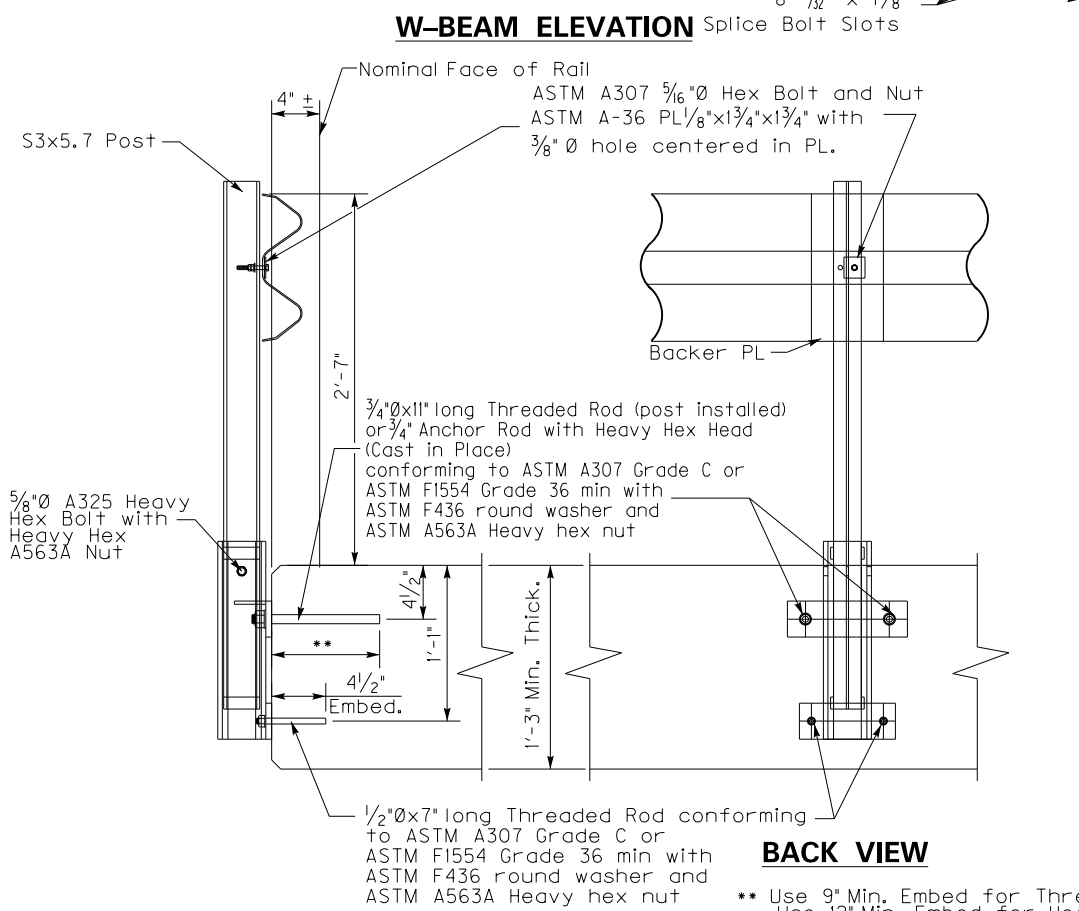

BACK VIEW

X-SECTION VIEW

** Use 9" Min. Embed for Threaded Rod post installed
Use 12" Min. Embed for Headed Anchors Cast in Place

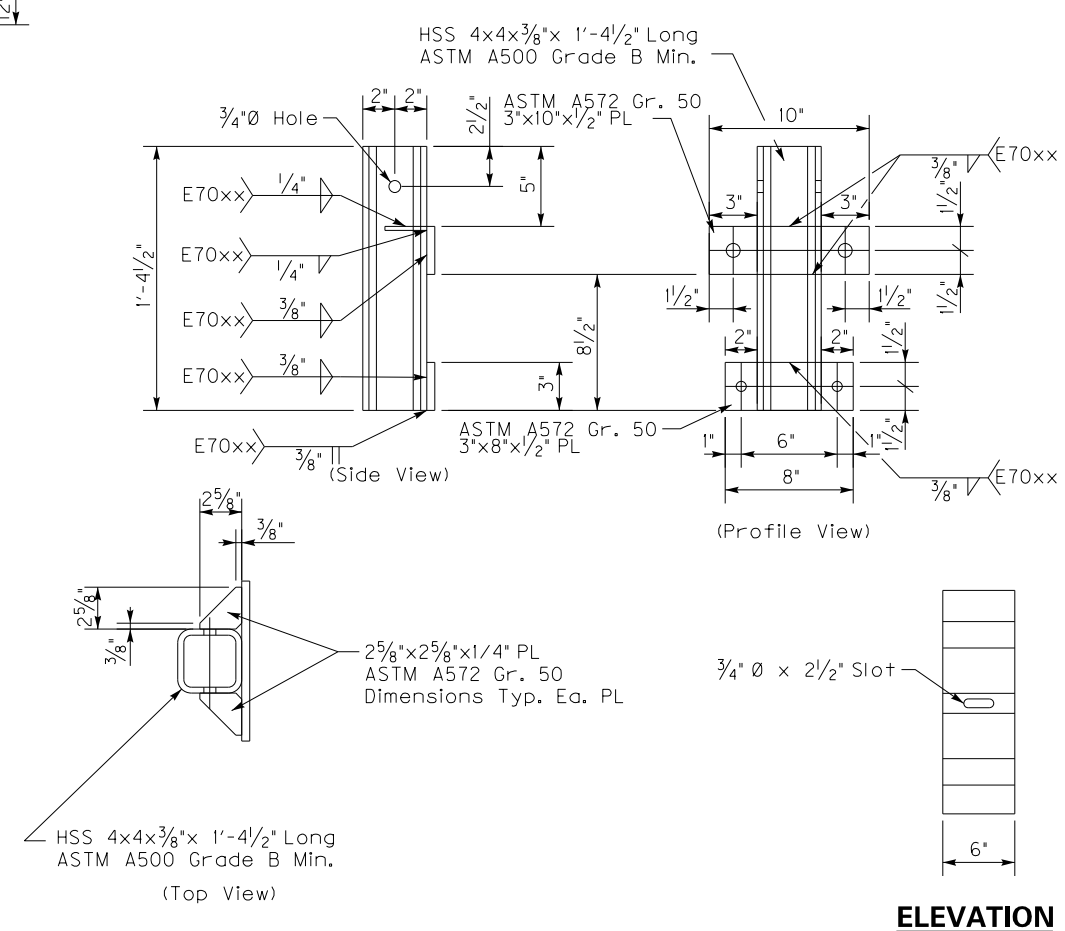

MOUNTING BRACKET

Note: Fabricator may elect to provide a ¾"Ø ASTM A563A heavy hex sleeve nut with a minimum length of 2¼" and minimum 1¼" across the flats along with threaded rod and the Anchor Rod. Maintain 12" minimum embedment with the ¾" Anchor Rod behind the sleeve nut. The fabricator may elect to provide a ½" ferrule insert for the bottom anchors with a minimum length of 2¾" and a safe working load of 2000 lbs in tension and shear along with the threaded rod. Alternatively, the bottom anchors may also be supplied with a ½"Ø ASTM A563A heavy hex sleeve nut with a minimum length of 1½" and a minimum of ⅞" across the flats. Maintain 4½" embedment behind the sleeve nut. All costs for sleeve nuts, threaded rods, anchor rods, etc. are incidental to the price bid for the Railing System Side Mounted MGS.

TRANSITION AND END TREATMENT NOTES:
This traffic railing must be anchored by a minimum of 25 feet of guardrail. This 25 feet at each corner of the bridge is to be paid with the roadway plans. See roadway plans for layout.

CONSTRUCTION NOTES:
Face of rail post must be plumb unless otherwise approved by the Engineer. Post must be perpendicular to adjacent roadway grade. Fully anchored guardrail must be attached to each end of rail. Typical guardrail construction as indicated above and not bridge rail transition or bridge end connector. It is recommended that the bridge plans show rail post locations. Round or chamfer exposed edges of rail posts and backer Plate to approximately 1/16" by grinding. Shop drawings are not required. Threaded rod may be cast in the beam/slab or may be drilled and epoxy grouted. Epoxy grout must conform to Section 826 and must have a minimum bond strength of 1,305 psi. Follow all manufacturers recommendations for installation.

MATERIAL NOTES:
All components must be supplied galvanized including fasteners, anchor rods, threaded rods, etc. Galvanize all steel components after fabrication in accordance with ASTM A123. W-beam must meet the requirements of Std. Dwg. RBR-001-12 except as modified in these plans. The contractor may furnish rail elements of 25'-0" or 12'-6" (Nominal) lengths. W-beam must have slotted holes at 3'-1½".

GENERAL NOTES:
This railing has been successfully evaluated by full scale crash test to meet MASH TL-3 criteria. This railing can be used for speeds 50 mph and greater.
This rail is designed to deflect approximately 4' - 4'-6" as it contains and redirects the errant vehicle. This rail may not be installed on top of or behind curbs that project above finished grade, on bridges with expansion joints providing more than 5" of movement, on retaining walls, or on grade separations and interchanges.
Repairs to impact-damaged post and mounting bracket unit are not permitted. Replace all impact-damaged posts with a new post. If mounting bracket is visibly damaged, replace the bracket with a new one as well.
Average weight of railing with no overlay: 19 plf total.

REVISION	DATE

DATE: APRIL 26, 2019	CHECKED BY
DESIGNED BY: R. Catron	C. Greenwell
DETAILED BY: A. Grace	R. Catron

Commonwealth of Kentucky
DEPARTMENT OF HIGHWAYS

COUNTY: HOPKINS

ROUTE: KY 70 — CROSSING: CLEAR CREEK

RAILING – SIDE MOUNTED MGS

ITEM NUMBER: 2-10006

PREPARED BY: Stantec

BRIDGING KENTUCKY — Restore | Renew | Replace

SHEET NO. S6

DRAWING NO. 27938

FILE NAME: ...\S06_Side Mounted MGS Railing.dgn
USER: srparsons
DATE PLOTTED: 4/5/2019 10:07:21 AM
E-SHEET NAME:
MicroStation v8.11.9.832

Contrary to Standard Drawings for Guardrail, place splices between posts off of bridge as shown.

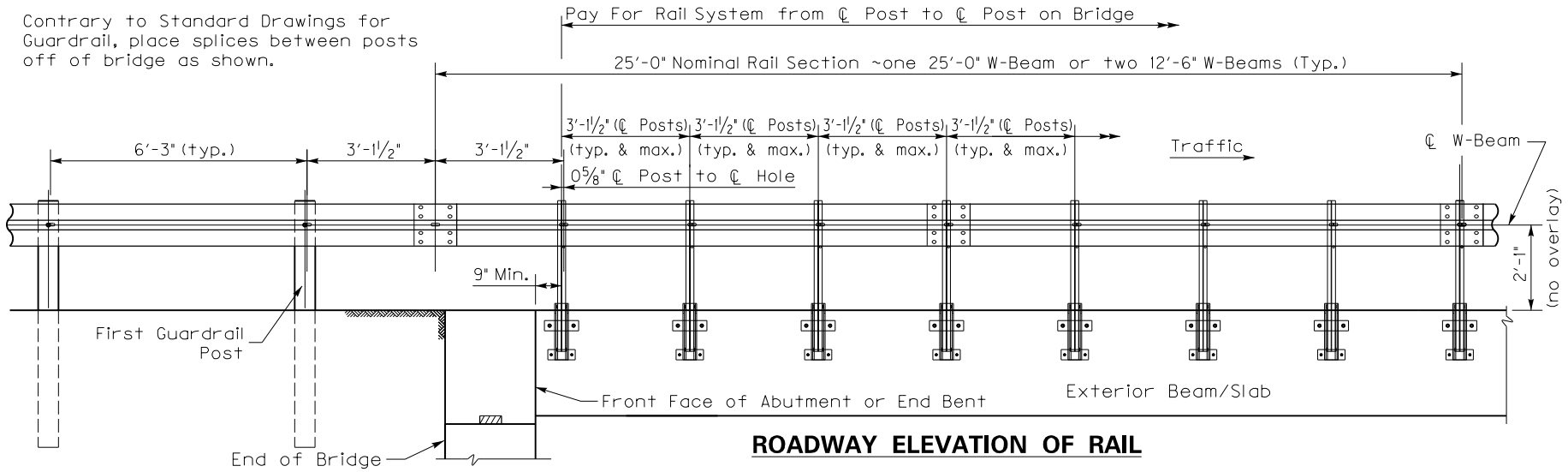

ROADWAY ELEVATION OF RAIL

TRANSITION AND END TREATMENT NOTES:
This traffic railing must be anchored by a minimum of 25 feet of guardrail. This 25 feet at each corner of the bridge is to be paid with the roadway plans. See roadway plans for layout.

CONSTRUCTION NOTES:
Face of rail post must be plumb unless otherwise approved by the Engineer. Post must be perpendicular to adjacent roadway grade. Fully anchored guardrail must be attached to each end of rail. Typical guardrail construction as indicated above and not bridge rail transition or bridge end connector. It is recommended that the bridge plans show rail post locations. Round or chamfer exposed edges of rail posts and backer Plate to approximately 1/16" by grinding. Shop drawings are not required. Threaded rod may be cast in the beam/slab or may be drilled and epoxy grouted. Epoxy grout must conform to Section 826 and must have a minimum bond strength of 1,305 psi. Follow all manufacturers recommendations for installation.

MATERIAL NOTES:
All components must be supplied galvanized including fasteners, anchor rods, threaded rods, etc. Galvanize all steel components after fabrication in accordance with ASTM A123. W-beam must meet the requirements of Std. Dwg. RBR-001-12 except as modified in these plans. The contractor may furnish rail elements of 25'-0" or 12'-6" (Nominal) lengths. W-beam must have slotted holes at 3'-1½".

GENERAL NOTES:
This railing has been successfully evaluated by full scale crash test to meet MASH TL-3 criteria. This railing can be used for speeds 50 mph and greater.
This rail is designed to deflect approximately 4' - 4'-6" as it contains and redirects the errant vehicle. This rail may not be installed on top of or behind curbs that project above finished grade, on bridges with expansion joints providing more than 5" of movement, on retaining walls, or on grade separations and interchanges.
Repairs to impact-damaged post and mounting bracket unit are not permitted. Replace all impact-damaged posts with a new post. If mounting bracket is visibly damaged, replace the bracket with a new one as well.
Average weight of railing with no overlay: 19 plf total.

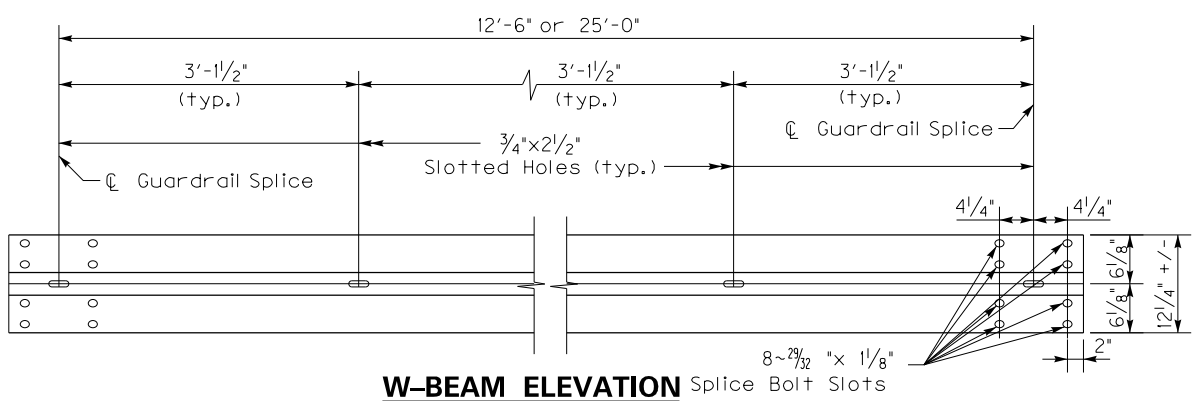

W-BEAM ELEVATION

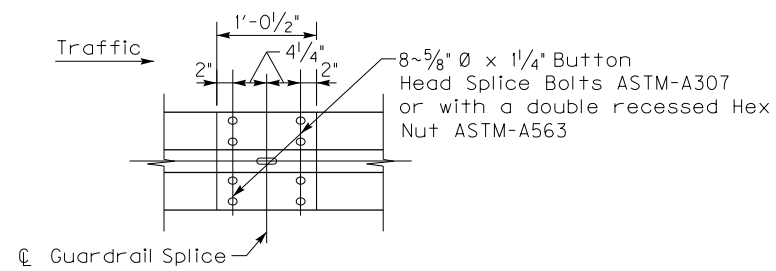

W-BEAM SPLICE ELEVATION

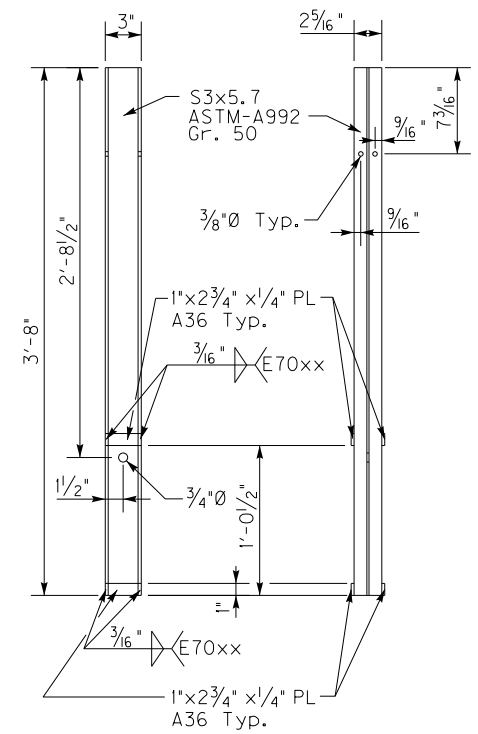

POST ELEVATION

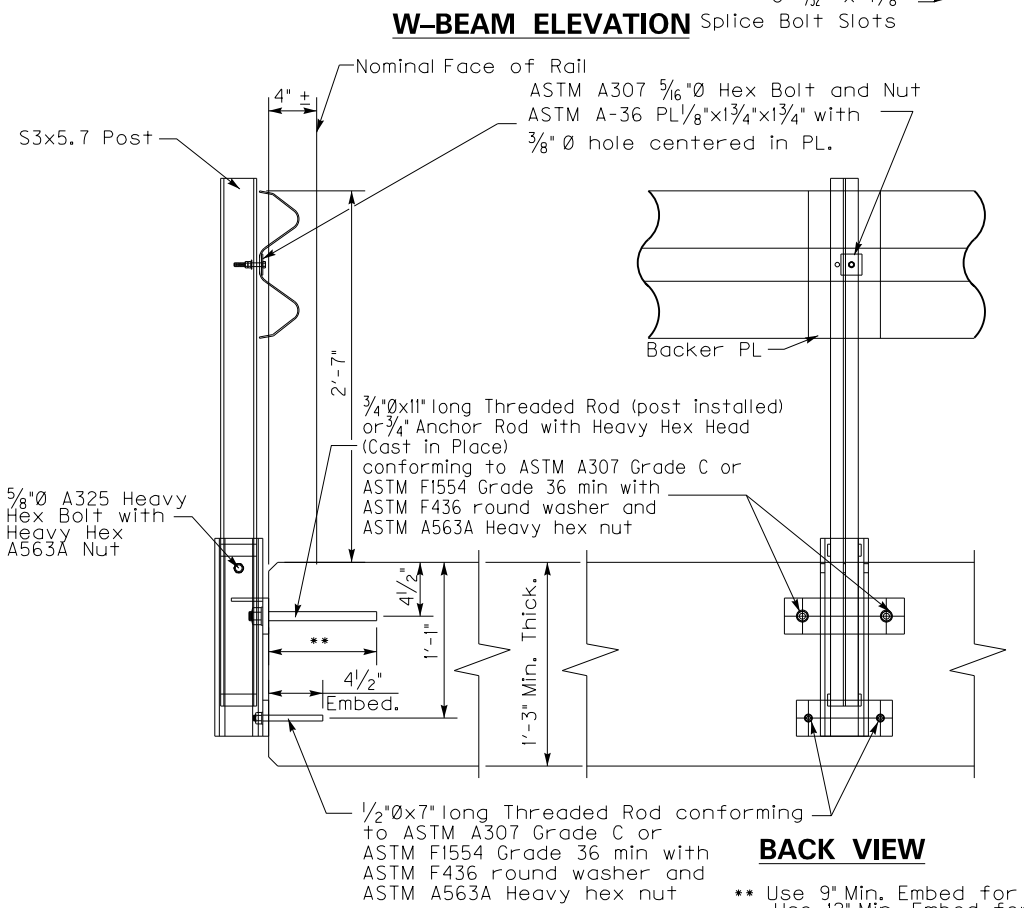

BACK VIEW

X-SECTION VIEW

** Use 9" Min. Embed for Threaded Rod post installed
Use 12" Min. Embed for Headed Anchors Cast in Place

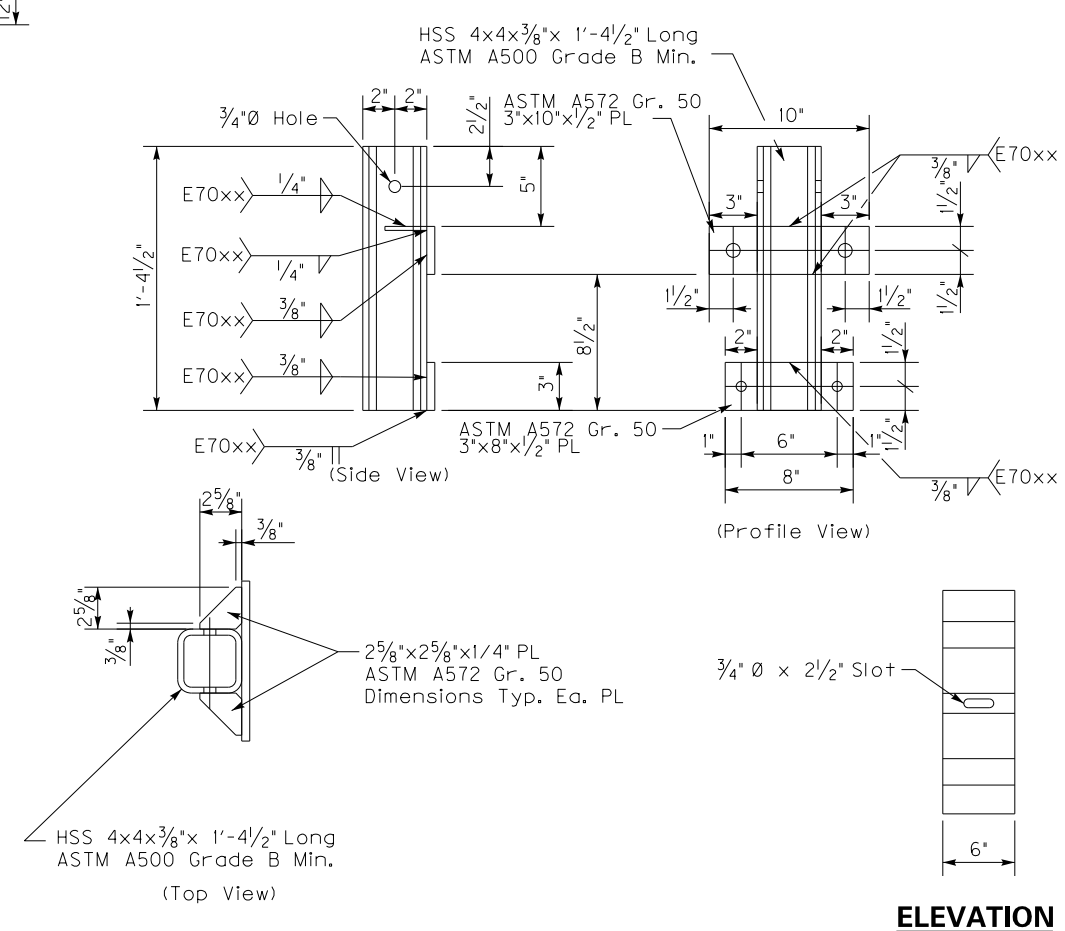

MOUNTING BRACKET

ELEVATION
(Backer Plate)

SIDE VIEW
(Backer Plate)

Note: Fabricator may elect to provide a ¾"Ø ASTM A563A heavy hex sleeve nut with a minimum length of 2¼" and minimum 1¼" across the flats along with threaded rod and the Anchor Rod. Maintain 12" minimum embedment with the ¾" Anchor Rod behind the sleeve nut. The fabricator may elect to provide a ½" ferrule insert for the bottom anchors with a minimum length of 2¾" and a safe working load of 2000 lbs in tension and shear along with the threaded rod. Alternatively, the bottom anchors may also be supplied with a ½"Ø ASTM A563A heavy hex sleeve nut with a minimum length of 1½" and a minimum of ⅞" across the flats. Maintain 4½" embedment behind the sleeve nut. All costs for sleeve nuts, threaded rods, anchor rods, etc. are incidental to the price bid for the Railing System Side Mounted MGS.

REVISION	DATE

DATE: APRIL 26, 2019	CHECKED BY
DESIGNED BY: R. Catron	C. Greenwell
DETAILED BY: A. Grace	R. Catron

Commonwealth of Kentucky
DEPARTMENT OF HIGHWAYS

COUNTY: HOPKINS

ROUTE: KY 70 | CROSSING: CLEAR CREEK

RAILING – SIDE MOUNTED MGS

ITEM NUMBER: 2-10006

PREPARED BY: Stantec

BRIDGING KENTUCKY — Restore | Renew | Replace

SHEET NO. S6

DRAWING NO. 27938

FILE NAME: ...\S06_Side Mounted MGS Railing.dgn
USER: srparsons
DATE PLOTTED: 4/5/2019 10:07:21 AM
E-SHEET NAME:
MicroStation v8.11.9.832